OWNER'S MANUAL

AXOPAR 22 SPYDER
AXOPAR 22 T-TOP

MODEL YEAR 2025

Table of Contents

1 Introduction 5

1.1 Purpose of this manual 5
1.2 Safety symbols 5
1.3 Document conventions 6
1.4 Copyright 6
1.5 Disclaimer 6
1.6 Warranty 7

2 Safety 8

2.1 Safe and responsible boat operation 8
2.2 Safety diagram 10
2.3 Fire protection and control 10
2.3.1 Fire control equipment 11
2.3.2 Boat owners' and users' responsibilities 11
2.3.3 Checklist: Fire in the engine 12
2.3.4 Checklist: After fire 12
2.4 Life raft 12
2.5 Safety labels on board 12

3 Product overview 19

3.1 Purpose of use 19
3.2 Identification 19
3.3 Builder's plate 20
3.4 CE certification 20
3.5 Dimensions and weight 21
3.6 Boat layout 23

4 Product description 24

4.1 Stability and buoyancy 24
4.1.1 Self-draining systems 24
4.1.2 Openings in the hull and deck 25
4.1.3 Bilge system 27
4.1.3.1 Bilge pumps and outlets 28
4.2 Technical systems 30
4.2.1 Electrical system 30
4.2.2 12V system 30
4.2.3 Main switches 31
4.2.4 Direct supply fuses 32
4.2.5 Fuses 33

© 2025 Axopar Boats

4.2.6 Heavy duty fuses....34
4.2.7 Batteries....34
4.2.7.1 Charging the batteries....35
4.2.7.2 Winter storage....35
4.2.7.3 Cleaning the batteries....35
4.2.8 Fuel system....35
4.2.8.1 Refueling the boat....36
4.2.8.2 Maintaining the fuel system....37
4.3 Optional equipment....37
4.3.1 Fresh water system....37
4.3.2 Septic system....40
4.3.2.1 Toilet seat....40
4.3.2.2 Septic tank....41
5 Transportation....42
5.1 Lifting the boat....42
5.2 Transporting and storing the boat....43
6 Operation....45
6.1 Handling devices....45
6.1.1 Steering console....45
6.1.2 Steering console switch panel....47
6.1.3 Steering system....47
6.1.3.1 Checking and topping up oil....48
6.1.3.2 Steering maintenance....48
6.1.4 Throttle lever....48
6.1.4.1 Trim and tilt....48
6.1.5 Starting the engine....49
6.2 Swivel seat - Driver and passenger seats....49
6.3 Inspecting the boat....50
6.3.1 Checklist: Regular inspection before leaving harbor....50
6.3.2 Checklist: After using the boat....51
6.4 Handling the boat....51
6.4.1 Checklist: Boat handling before leaving harbor....51
6.4.2 Leaving the jetty....52
6.4.3 Driving the boat....52
6.4.3.1 Dead man's switch....53
6.4.3.2 Driving at high speed....53
6.4.3.3 Driving in rough seas....54
6.4.3.4 Maneuvering in narrow channels....54
6.4.4 Visibility from steering position....55
6.4.5 Using the trim tabs....55
6.5 Preventing falling overboard....55

© 2025 Axopar Boats

6.6 Anchoring, docking and mooring....57
6.6.1 Fastening points....57
6.6.2 Docking....58
6.6.3 Checklist: Before anchoring....58
6.6.4 Towing and mooring....59

7 Maintenance....60

7.1 Cleaning and maintaining the gelcoat surface....60
7.2 Antifouling....62
7.3 Maintaining the interiors....63
7.3.1 Plastic and painted surfaces....63
7.3.2 Doors and hatches....63
7.4 Maintaining the cover....63
7.4.1 Cleaning the cover....63
7.5 Protecting underwater metal parts....64
7.6 Preventing corrosion....64
7.7 Preventing frost damage....64
7.8 Checklist: Before winter lay-up....65
7.9 Checklist: Before launching....65
7.10 Maintenance log....66
7.11 Corrective maintenance....68
7.11.1 Deposits....68
7.11.2 Scratches and nicks....68
7.11.3 Stains....68
7.11.4 Deep marks, gouges and holes....68

8 Environment....69

8.1 Requirements for North America....69

9 Appendix I: Checklists....71

9.1 Checklist: Fire in the engine....71
9.2 Checklist: After fire....71
9.3 Checklist: After grounding....71
9.4 Checklist: Regular inspection before leaving harbor....72
9.5 Checklist: After using the boat....73
9.6 Checklist: Boat handling before leaving harbor....73
9.7 Checklist: Before anchoring....73
9.8 Checklist: Before winter lay-up....74
9.9 Checklist: Before launching....74
9.10 Maintenance log....75

10 Appendix II: Fuel system....77

11 Appendix III: Electrical diagrams....78

© 2025 Axopar Boats

12 Appendix IV: AIS Decontamination – North America.....79

13 Appendix V: Transport dimensions..... 80

© 2025 Axopar Boats

1 Introduction

1.1 Purpose of this manual

This owner's manual contains important information and instructions for using your boat.

In this owner's manual you can find important information that help you handle and maintain your boat. The manual contains detailed information about the boat and the systems installed, and general information about handling and taking care of the boat. The latest version of the manual is available in electronic format at the manufacturer's website.

Read the manual carefully and familiarize yourself with your boat before you start to use it. Also ensure that the anticipated wind and wave conditions correspond to the design category of your boat, and that you and your crew are able to handle the boat in these conditions.

This owner's manual is not a substitute for boating safety skills or good seamanship.

If this is your first boat or if this boat type is new to you, ensure you can handle the boat before you set out for the first time.

For information about local sea schools and approved instructors, please ask your boat dealer, the local boat clubs and national motorboat or yacht federations for advice. They can also provide information on specific local regulations on issues such as a driving licence or authorization, registration, insurance, and safety equipment.

This owner’s manual is not a detailed maintenance or troubleshooting guide. If problems occur, contact the boat manufacturer or its local representative. When you are in need of maintenance or repair and alteration work, always turn to competent and trained professionals. Changes that can affect the boat’s security features must be assessed, carried out and documented by competent professionals. The boat manufacturer cannot be held responsible for unauthorized modifications. Every change to the boat’s center of gravity (from highly mounted heavy equipment or a new engine type etc.) significantly affects the stability, trim and performance of the boat.

Keep this manual in a safe place and pass it on to the new owner if you sell your boat. If the manual is mislaid or destroyed, a copy can be ordered from your dealer or downloaded from the manufacturer's website.

See the purchase agreement or order for the scope of your purchase. In case something does not work satisfactorily with your boat or its equipment, you can check the service documents for possible service and repair measures. If uncertain, always contact your dealer.

1.2 Safety symbols

This owner's manual contains danger, warning, caution and notice statements informing the user or authorized service representatives of any potential harm to the product or person.

Hazard is defined as a source of potential injury to a person.

All abnormal use is forbidden, including disregarding information on safety.

© 2025 Axopar Boats

⚠ DANGER	**Danger** indicates an imminently hazardous situation which, if not avoided, **will result in death or serious injury**.
⚠ WARNING	**Warning** indicates a potentially hazardous situation which, if not avoided, **could result in death or serious injury**.
⚠ CAUTION	**Caution** indicates a potentially hazardous situation which, if not avoided, **might result in minor or moderate injury**.
NOTICE	**Notice** indicates a potential situation which, if not avoided, **might result in property damage or in an undesirable result or state**.
ℹ	The information icon calls attention to information that clarifies or simplifies a procedure.

1.3 Document conventions

Units

This manual uses SI units in accordance with ISO 1000. In some cases, other units may have been used alongside.

An exception is the wind velocity, which in the Recreational Boat Directive is given in the Beaufort Scale.

Terminology

In this manual, the right side of the hull is referred to as starboard and the left side as port.

1.4 Copyright

Copyright ©2025 Axopar Boats. All rights reserved.

This Owner's Manual is protected by copyright controlled by Axopar Boats. This manual cannot be wholly or partly reproduced without prior written authorization by Axopar Boats. This material also contains confidential information, which may not be disclosed to others without the prior written consent of Axopar Boats.

1.5 Disclaimer

The material in this manual is for information purposes only.

Axopar Boats reserves the right to change the products without prior notice to improve reliability, function, design or other characteristics of the products. Axopar Boats assumes no liability for any damages, losses, costs or expenses arising out of or relating to the use of this manual or the products described herein.

Axopar Boats makes no representations and warranties with respect to this manual, either express or implied, including, but not limited to, the implied warranties of merchantability and fitness for a particular purpose.

1.6 Warranty

The Limited Warranty for the boat and the relevant contact information are enclosed as a separate document.

For any warranty claims, please contact your Axopar dealer mentioned on the cover page.

© 2025 Axopar Boats

2 Safety

⚠ WARNING

The boat owner is responsible for making sure that the safety equipment on the boat meets the rules and regulations of the local authorities.

- Keep the necessary safety equipment up to date and on the boat at all times.

Check the preferred location of the major safety equipment in the section ***Safety diagram***.

⚠ WARNING

Overloading the boat can damage the engine, even when shut off.

- When loading the boat, never exceed the maximum recommended load of the boat shown in the builder's plate.
- Always load the boat carefully and distribute loads appropriately to maintain design trim.
- Avoid placing heavy equipment or material high up in the boat.

The liquids in the built-in tanks are not included in the maximum load shown on the builder's plate.

⚠ WARNING

When out on the water, always use the seats intended for the passengers.

Do not exceed the maximum number of persons allowed in the boat, shown in the builder's plate.

The total weight of the persons on board and their personal luggage must never exceed the maximum load of the boat shown in the builder's plate.

⚠ CAUTION

Risk of personal injury and risk of damage to the roof or roof structures.

Do not place or attach any load or equipment on the roof or to the roof structures if there is no specific roof rack.

It is forbidden to enter the roof or dangle from the roof structures.

2.1 Safe and responsible boat operation

Please familiarize yourself to these safety aspects before using the boat. The person controlling the boat is in charge of the safety of all the passengers as well as other seafarers.

Neglecting these safety rules might lead to serious injury or death.

- Anyone who controls the boat must be competent to operate a boat of this type and size.
- The boat must not be controlled by an unqualified operator or by an operator under the influence of alcohol, drugs or other substance which impair judgement.
- The boat must always be operated at speeds that will not put people or property in danger.
- The captain must constantly be aware of conditions surrounding the boat when underway and especially before sharp turns.

© 2025 Axopar Boats

- In challenging conditions such as rough water and winds, impaired visibility, and congested waterways; reduce speed, use appropriate navigation equipment and lights, and use a lookout to identify possible hazards.
- Pay attention to your wake. It can endanger smaller boats or damage moored boats or other property. You are responsible for damage caused by your wake.
- Only allow passengers to ride in areas that do not pose a hazard to themselves or the boat.
- Do not allow passengers to ride on aft folding seats, aft fender boxes or gunwales.
- Passengers must remain seated while the boat is moving.
- Use of alcohol, drugs, or other judgment-impairing substances poses a serious threat to yourself and others. The boat operator is responsible for the behaviour of people on board.
- For every passenger on board, the boat must carry one wearable personal flotation device (PFD).

⚠ WARNING

Speed hazard

This is a high-performance vessel; the speed of the craft needs to be adapted to the environment. To ensure your passengers' safety and comfort, avoid sharp turns in speeds exceeding 40 knots. Never operate your boat at speeds which exceed your ability to react to surprising and unpredictable situations. The captain is always responsible for operating the vessel in a safe way.

⚠ WARNING

Never operate a boat at a speed at which you do not feel comfortable.

⚠ DANGER

Slipping hazard

Deck might be slippery when wet, even on non-skid areas. Be extremely cautious on slippery surfaces and wear suitable footwear.

⚠ DANGER

Do not go out boating in severe weather conditions as this might lead to serious injuries or death. Always get back to shore before the weather turns bad.

© 2025 Axopar Boats

2.2 Safety diagram

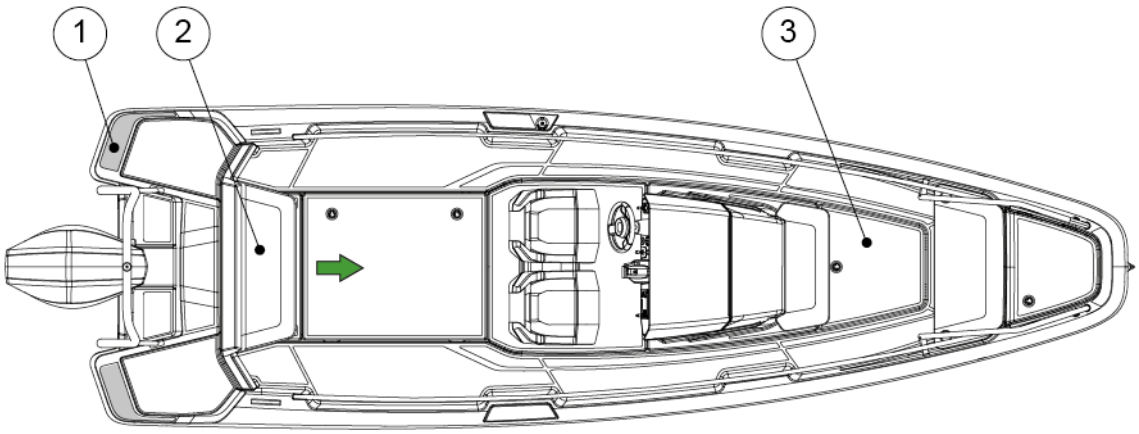

(1) Swim ladder
(2) Fire extinguisher
(3) Life raft storage
→ Exit

2.3 Fire protection and control

The most common fire sources are the engine and the stove. If there is a fire in the boat, it may result in an explosion.

⚠ WARNING

Fire usually spreads very fast — be quick to extinguish the fire with the fire extinguisher on the boat!

See the section ***Safety diagram*** for the exact location of the fire extinguisher(s).

If the fire starts to get out of control, leave the burning boat to save lives.

⚠ WARNING

Always put down the fire by depriving the fire of oxygen.

Do not use water!

Using water in fire involving flammable liquids can spread the liquid and make the fire worse.

© 2025 Axopar Boats

⚠ WARNING If the fire reaches the fuel containers, an explosion may occur and cause a large area around the boat to burn.

- Keep the bilge clean and check it regularly for fuel and gas fumes or fuel and oil leaks.
- Do not hang curtains or other flammable material near or above any equipment with naked flames.
- Never leave the boat unattended when the heater is switched on.
- Never refuel or replace gas containers when the engines are running.
- Never smoke when handling fuel or gas.
- Never block evacuation routes or emergency exits.
- Never block access to safety equipment such as fuel valves or main power switches.
- Never block access to fire extinguishers, visible or concealed.
- Never modify the boat's systems (especially electrical, fuel or gas systems).

2.3.1 Fire control equipment

Check the exact locations of the fire control equipment in the section ***Safety diagram***.

Fire extinguishers

You must fit the boat with a hand-held fire extinguisher with a fire rating of at least 8A/68B.

Check the exact locations of the fire extinguishers in the section ***Safety diagram***.

The fire extinguishers are not included in the manufacturer's delivery. Before using the boat, it must be furnished with fire extinguishers.

Fire blanket

A fire blanket is ideal for putting out small fires and also one of the best options if a person's clothes catch fire.

- Keep a fire blanket onboard in an easily accessible place.

2.3.2 Boat owners' and users' responsibilities

It is your responsibility as the boat owner and user to ensure that the fire control equipment is accessible at all times.

- Check the fire extinguishing equipment regularly at the intervals specified for the equipment.
- Replace equipment with expired date immediately with equivalent or better equipment.
- Advice the crew and guests of the location and instructions for use of the fire control equipment, and the location of evacuation routes and emergency exits.

© 2025 Axopar Boats

2.3.3 Checklist: Fire in the engine

- Stop the engine.
- Steer the boat up against the wind, if possible.
- Make sure all passengers have life jackets.
- If necessary:
  - Evacuate the passengers.
  - Call for sea rescue.
- Shut off fuel and main power switches.
- Extinguish the fire.
- Wait until fully certain that the fire has been extinguished before opening the engine cover.

  Carefully open the engine cover and be prepared to use the handheld fire extinguisher if necessary for post-fire extinguishing.
- Put out possible smoldering fires with water.

2.3.4 Checklist: After fire

- Open doors and windows for better ventilation.
- Inspect the boat and its equipment, and repair any damages.
- Contact local authorities, if needed.
- Make sure that the fire extinguishing equipment is refilled or replaced after use.

2.4 Life raft

The boat is not equipped with a life raft by the manufacturer.

Storing a life raft

If you decide to acquire a life raft for your boat, stow it to the bow of the boat, so that it is easily accessible in case of emergency.

Using the life raft

The life raft must be tied to the stern of the boat and prepared for use.

In an emergency, it is easiest and safest to board the life raft from the swimming deck. Switch off the engine before using the life raft.

Follow the life raft manufacturer’s instructions.

2.5 Safety labels on board

The following picture and table present the location and description of the safety labels on board.

© 2025 Axopar Boats

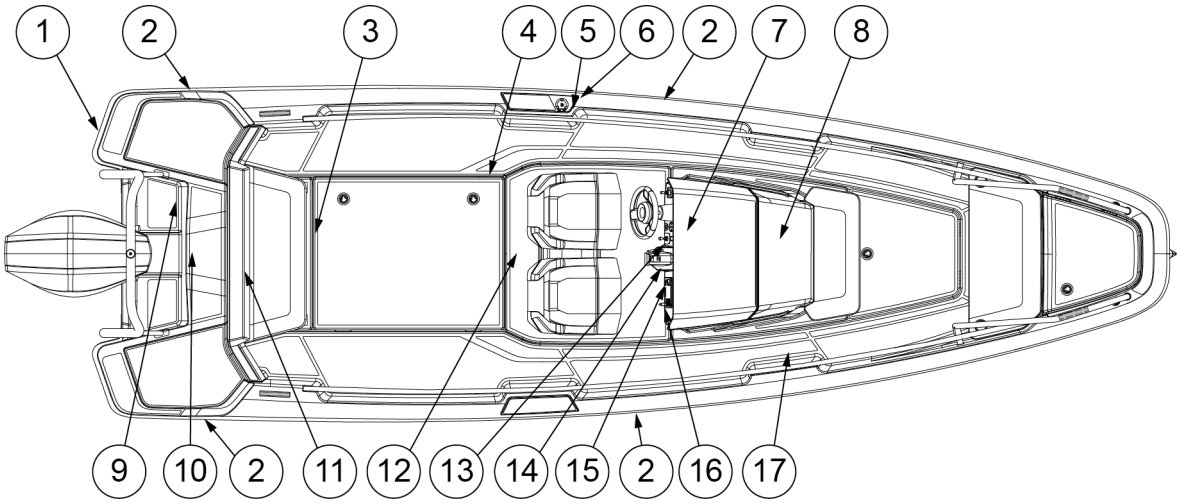

Position	Label	Description
1		**Warning** Rotating propeller may cause serious injury or death. Do not approach or use ladder when engine is running.
1	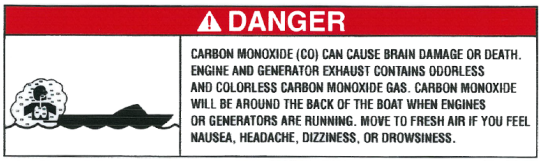	**Danger** Carbon monoxide (CO) can cause brain damage or death. Engine and generator exhaust contains odorless and colorless carbon monoxide gas. Carbon monoxide will be around the back of the boat when engines or generators are running. Move to fresh air if you feel nausea, headache, dizziness, or drowsiness.
2	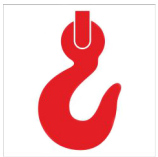	Fastening point
3		Fire extinguisher

© 2025 Axopar Boats

Position	Label	Description
4		**Warning** No ventilation is provided. Fuel vapors are a fire and explosion hazard. To avoid injury or death, do not store fuel or flammable liquids here.
5	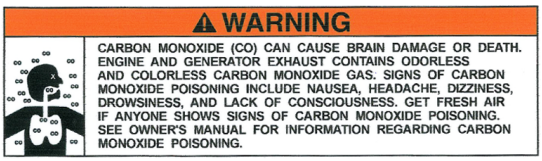	**Warning** Carbon monoxide (CO) can cause brain damage or death. Engine and generator exhaust contains odorless and colorless carbon monoxide gas. Signs of carbon monoxide poisoning include nausea, headache, dizziness, drowsiness, and lack of consciousness. Get fresh air if anyone shows signs of carbon monoxide poisoning. See owner's manual for information regarding carbon monoxide poisoning.
5		**Warning** Qualified operator to be in control at all times. Operation by an unqualified operator can cause loss of control. This may result in severe injury, death, or property damage. Boat stability and handling will change with weight distribution. Read owners manual before use.
5	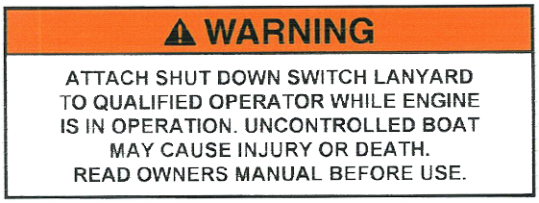	**Warning** Attach shut down switch lanyard to qualified operator while engine is in operation. Uncontrolled boat may cause injury or death. Read owners manual before use.
5		**Warning** Use caution with skier in tow as tow rope may backsplash into cockpit when released.
5		**Warning** Rotating propeller may cause serious injury or death. Shut off engine when near persons in the water.

© 2025 Axopar Boats

Position	Label	Description
6	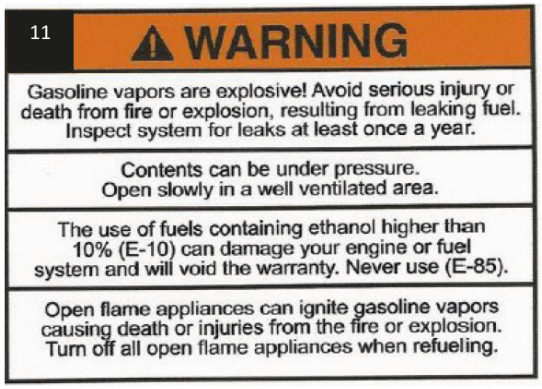	**Warning** Gasoline vapors are explosive! Avoid serious injury or death from fire or explosion, resulting from leaking fuel. Inspect system for leaks at least once a year. Contents can be under pressure. Open slowly in a well ventilated area. The use of fuels containing ethanol higher than 10% (E-10) can damage your engine or fuel system and will void the warranty. Never use (E-85). Open flame appliances can ignite gasoline vapors causing death or injuries from the fire or explosion. Turn off all open flame appliances when refueling.
7		Do not drink the water
8		Sink drain shutoff valve
9	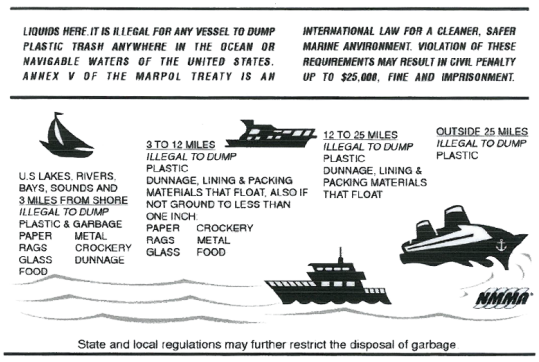	Liquids here. It is illegal for any vessel to dump plastic trash anywhere in the ocean or navigable waters of the United States. Annex V of the Marpol Treaty is an international law for a cleaner, safer marine environment. Violation of these requirements may result in civil penalty up to $25,000, fine and imprisonment. U.S. lakes, rivers, bays, sounds and 3 miles from shore Illegal to dump plastic & garbage, paper, metal, rags, crockery, glass, dunnage, food 3 to 12 miles Illegal to dum plastic, dunnage, lining & packing materials that float. Also if not ground to less than one inch: paper, crockery, rags, metal, glass, food 12 to 25 miles illegal to dump plastic, dunnage, lining & packing materials that float Outside 25 miles illegal to dump plastic State and local regulations may further restrict the disposal of garbage.

© 2025 Axopar Boats

Position	Label	Description
9	DISCHARGE OF OIL PROHIBITED THE FEDERAL WATER POLLUTION CONTROL ACT PROHIBITS THE DISCHARGE OF OIL OR OILY WASTE INTO OR UPON THE NAVIGABLE WATERS OF THE UNITED STATES, OR THE WATERS OF THE CONTIGUOUS ZONE, OR WHICH MAY AFFECT NATURAL RESOURCES BELONGING TO, APPERTAINING TO, OR UNDER THE EXCLUSIVE MANAGMENT AUTHORITY OF THE UNITED STATES, IF SUCH DISCHARGE CAUSES A FILM OR DISCOLORATION OF THE SURFACE OF THE WATER OR CAUSES A SLUDGE OR EMULSION BENEATH THE SURFACE OF THE WATER. VIOLATORS ARE SUBJECT TO SUBSTANTIAL CIVIL PENALTIES AND/OR CRIMINAL SANCTIONS INCLUDING FINES AND IMPRISONMENT. NMMA	**Discharge of oil prohibited** The Federal Water Pollution Control Act prohibits the discharge of oil or oily waste into or upon the navigable waters of the United States, or the waters of the contiguous zone, or which may affect natural resources belonging to, appertaining to, or under the exclusive management authority of the United States, if such discharge causes a film or discoloration of the surface of the water or causes a sludge or emultion beneath the surface of the water. Violators are subject to substantial civil penalties and/or criminal sanctions including fines and imprisonment.
10	WARNING SKI POLE MUST BE SECURED WHEN IN USE. TOW ROPE MAY BACKLASH INTO COCKPIT. DO NOT USE TO TOW ITEMS SUCH AS TUBES OR OTHER TOWABLES. MAX TOW LOAD CAPACITY IS 130 KG.	**Warning** Ski pole must be secured when in use. Tow rope may backlash into cockpit. Do not use to tow items such as tubes or other towables. Max tow load capacity is 130 kg.
11	WARNING ELECTRICAL SHOCK AND FIRE HAZARD. FAILURE TO FOLLOW THESE INSTRUCTIONS MAY RESULT IN INJURY OR DEATH. (1) Turn off the boat's shore power connection switch before connecting or disconnecting the shore power cable. (2) Connect shore power cable at the boat first. (3) If polarity-warning indicator is activated, immediately disconnect cable. (4) Disconnect shore power cable at shore outlet first. (5) Close shore power inlet cover tightly. DO NOT ALTER SHORE POWER CABLE CONNECTORS	**Warning** Electrical shock and fire hazard. Failure to follow these instructions may result in injury or death. (1) Turn off the boat's shore power connection switch before connecting or disconnecting the shore power cable. (2) Connect shore power cable at the boat first. (3) If polarity-warning indicator is activated, immediately disconnect cable. (4) Disconnect shore power cable at shore outlet first. (5) Close shore power inlet cover tightly. **Do not alter shore power cable connectors**
11		Pay attention to the warnings and read the manual.
11	CAUTION IF SWITCH IS TURNED OFF WHILE ENGINE IS RUNNING ALTERNATOR WILL BE DAMAGED.	**Caution** If switch is turned off while engine is running alternator will be damaged.

© 2025 Axopar Boats

Position	Label	Description
11	**⚠ WARNING** **ELECTRICAL SHOCK AND FIRE HAZARD. FAILURE TO FOLLOW THESE INSTRUCTIONS MAY RESULT IN INJURY OR DEATH.** (1) Turn off the boat's shore power connection switch before connecting or disconnecting the shore power cable. (2) Connect shore power cable at the boat first. (3) If polarity-warning indicator is activated, immediately disconnect cable. (4) Disconnect shore power cable at shore outlet first. (5) Close shore power inlet cover tightly. **DO NOT ALTER SHORE POWER CABLE CONNECTORS** **⚠ MISE EN GARDE** **RISQUE DE CHOC ELECTRIQUE ET D'INCENDIE. LE NON RESPECT DE CES INSTRUCTIONS PEUT CAUSE DES BLESSURES SERIEUSES OU LA MORT.** (1) Fermer l'interrupteur de l'alimentation à terre avant de raccorder ou de débrancher le cable d'alimenation. (2) Raccorder d'abord le cable d'alimentation à terre au navire. (3) Si l'indicateur de polarité est activé, débrancher immédiatement le cable d'alimentation. (4) Débrancher d'abord le cable d'alimentation à terre de la borne du quai. (5) Fermer hermétiquement le couvercle du cable d'alimentation à terre. **NO PAS MODIFIER LE CABLE D'ALIMENTATION À LA TERRE**	**Warning** Shore power Canada version.
12	**⚠ WARNING** AVOID SERIOUS INJURY OR DEATH. UNEXPECTED SEAT ROTATION MAY CAUSE EJECTION OF OCCUPANT. LOCK SWIVEL WHEN SPEED EXCEEDS 5 MPH.	**Warning** Avoid serious injury or death. Unexpected seat rotation may cause ejection of occupant. Lock swivel when speed exceeds 5 mph.
13	**BOATMAN'S CHECK LIST** For maximum enjoyment and safety, check each of these items BEFORE you start your engine: ✔ DRAIN PLUG (Securely in place?) ✔ LIFE-SAVING DEVICES (One for every person on board?) ✔ STEERING SYSTEM (Working smoothy and properly?) ✔ FUEL SYSTEM (Adequate fuel? Leaks? Fumes?) ✔ BATTERY (Fully charged? Cable terminals clean and tight?) ✔ ENGINE (In neutral?) ✔ CAPACITY PLATE (Are you overloaded or overpowered?) ✔ WEATHER CONDITIONS (Safe to go out?) ✔ ELECTRICAL EQUIPMENT (Lights, horn, pump, etc.?) ✔ EMERGENCY GEAR (Fire extinguisher, bailer, paddle, anchor & line, signaling device, tool kit, etc.?) NMMA © NMMA 1981	**Boatman's check list** For maximum enjoyment and safety, check each of these items before you start your engine: - Drain plug (Securely in place?) - Life-saving devices (One for every person on board?) - Steering system (Working smoothy and properly?) - Fuel system (Adequate fuel? Leaks? Fumes?) - Battery (Fully charged? Cable terminals clean and tight?) - Engine (In neutral?) - Capacity plate (Are you overloaded or overpowered?) - Electrical equipment (Lights, horn, pump, etc?) - Emergency gear (Fire extinguisher, bailer, paddle, anchor & line, signaling device, tool kit, etc.?)

© 2025 Axopar Boats

Position	Label	Description
14		**Certification plate US** Design compliance with NMMA requirements and US Coast Guard safety standards. Meets EVAP standards using certified components.
15	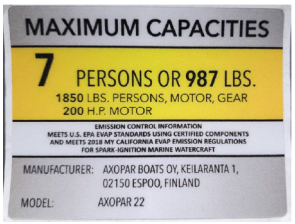	Maximum capacities
16		**Warning** Make sure that engine cut-off switch is mounted before delivery of the boat
16		NMMA Certified
17		**Warning** Avoid personal injury. Stay inside deck rails (and gates) when boat is underway

© 2025 Axopar Boats

3 Product overview

3.1 Purpose of use

The boat is a recreational boat, thus not suitable for professional use.

3.2 Identification

Each boat has a unique identification code, containing 14 characters and a hyphen.

The height of the code text is 6 mm, and it is located on the starboard side of the stern.

Example: FI – AXO2A001F920	**Data**
FI	Country of manufacturer: Finland
-	Hyphen
AXO	Manufacturer: Axopar Boats
2A	Boat model • A = Spyder • B = T-Top
001	Boat number
F	Manufacturing month • A = January • B = February • C = March • etc.
9	Last digit of the manufacturing year
20	Model year

© 2025 Axopar Boats

3.3 Builder's plate

The builder’s plate is always located close to the steering position of the boat.

DNV has inspected that the boat fulfills the Recreational Boat Directive and related standards' requirements.

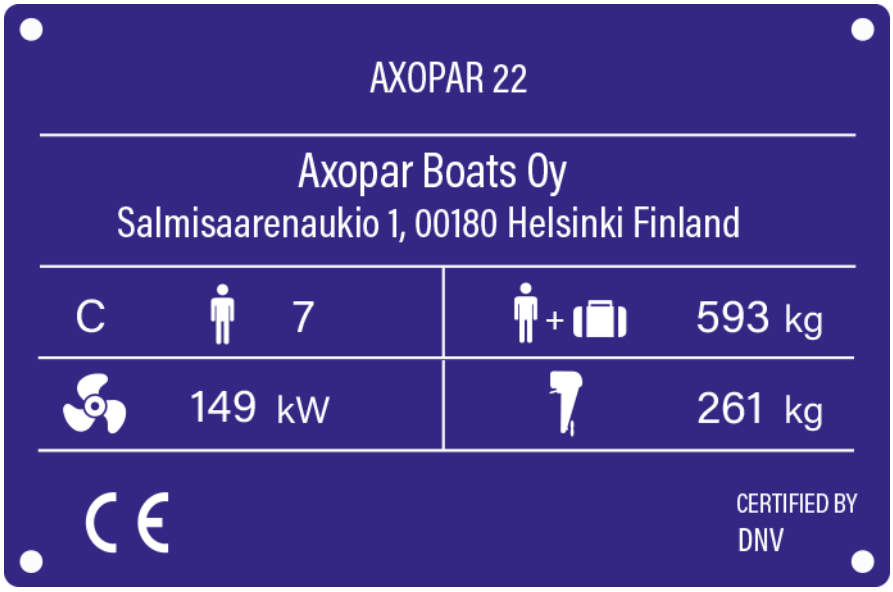

The builder's plate contains the following information:

- Boat model
- Manufacturer's address
- Maximum number of persons on board
- Maximum load: total weight of persons including personal luggage and basic equipment, and excluding tank contents
- Maximum engine power
- Maximum engine weight

3.4 CE certification

This boat is classified to CE category C.

The category is determined according to the maximum number of persons allowed onboard.

The CE certification indicates that a boat is designed and built in such a way that it retains its stability and buoyancy in given circumstances and meets other important requirements that are characteristic of the category in question. One of these requirements is that the boat must be easy to maneuver.

© 2025 Axopar Boats

The CE categories classification also signifies that a boat is designed and constructed to withstand the following parameters in respect of stability, buoyancy, and other relevant essential requirements stated.

Category	Description
C. Inshore	The boat is designed for voyages in coastal waters, large bays, estuaries, lakes and rivers, where conditions up to and including wind force 6 Beaufort Scale and significant wave heights up to and including 2 m may be experienced.

3.5 Dimensions and weight

Dimensions

Dimension	SI units	US units
Hull length (LH)	7.2 m	23 ft 7 in
Overall length (LMAX) (excluding engine)	7.2 m	23 ft 7 in
Hull beam (BH)	2.23 m	7 ft 4 in
Draught at max. load	0.95 m	3 ft 1 in
Height measured from waterline at light load (without portable navigation light)	Spyder: 1.5 m T-Top: 2.2 m	Spyder: 4 ft 11 in T-Top: 7 ft 3 in

Power

	SI units	US units
Maximum recommended engine power	1 x 149 kW	1 x 200 hp

Weight and loading

	SI units	US units
Hull weight (excluding engine)	1100 kg	2425 lb

© 2025 Axopar Boats

	Category C
Maximum number of persons Default weights: • Adult: 75 kg (165 lb) • Child: 37.5 kg (83 lb)	7

	Category C	
	SI units	US units
Total weight of all persons	525 kg	1157 lb
Maximum recommended load	823 kg	1814 lb
Maximum recommended load on CE plate	593 kg	1307 lb
Boat weight at maximum load	2620 kg	5776 lb

of which

	SI units	US units
Maximum recommended engine weight	261 kg	575 lb
Stores, cargo, provisions, miscellaneous equipment	15 kg	33 lb
Life raft weight	39 kg	86 lb
Basic equipment	41 kg	90 lb
Consumable liquids in permanently installed tanks	203 kg	448 lb
Maximum mass on trailer	2095 kg	4619 lb

Tank capacity

	SI units	US units
Fuel tank	230 l	61 gal
Fresh water tank	32 l	8 gal
Septic tank	25 l	7 gal

The boat's stability assessment is based on maximum load conditions.

© 2025 Axopar Boats

The maximum recommended load only contains the weight components mentioned above.

3.6 Boat layout

The boat has several deck options. The layout of the equipment and the technical components may vary depending on the chosen accessories.

The standard boat comes with an open aft deck equipped with an aft sofa. The aft deck can also be equipped with a U-sofa or a multistorage compartment.

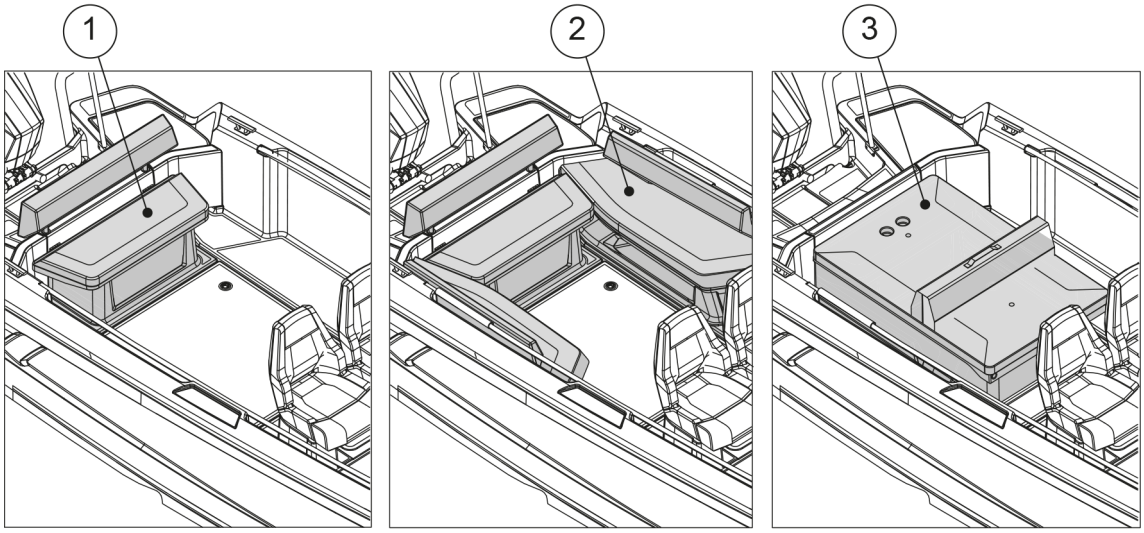

(1) Aft sofa
(2) U-sofa
(3) Multi-storage

In the front part of the cockpit, there is a separate storage room with a door that opens to the front deck. The storage room can be replaced with an optional toilet.

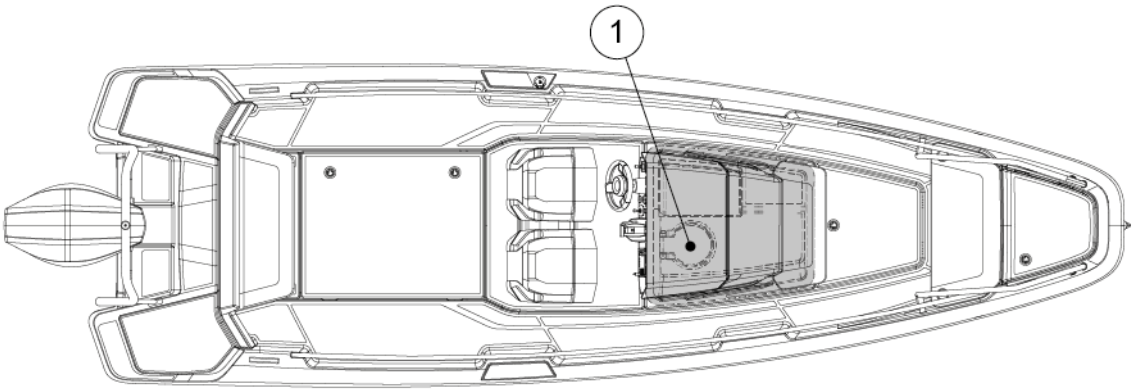

(1) Storage room or optional toilet

© 2025 Axopar Boats

4 Product description

4.1 Stability and buoyancy

Pay attention to the stability and buoyancy of the boat.

All weight dispositions (for example installing a fishing tower or radar, and engine replacement) can have a significant impact on the stability, trim, and performance of the boat.

- The bilge water level needs to be kept at a minimum.
- The stability of the boat is compromised if any weight is placed in a high position.

In stormy weather, all hatches, compartments and doors must be kept closed to minimize the risk of flooding.

Breaking waves represent a significant danger to stability.

⚠ WARNING To avoid the risk of flooding, always keep the seacocks closed when not in use (for example, the seacock for the toilet's flushing water).

4.1.1 Self-draining systems

The boat is equipped with self-draining systems for the whole deck area. The system is drained through drain holes in the aft of the boat. In addition to rainwater, the drain holes are intended to drain water ending up on the deck through splashing or from breaking waves.

There are drain holes for water in both aft corners of the deck. The openings are directly connected to the sea. The deck of the boat has been designed to allow the water to drain straight into the sea via the water gullies.

⚠ CAUTION Do not close the drain holes when using the boat.

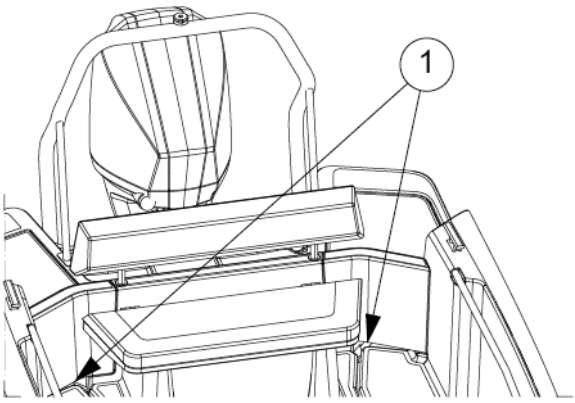

(1) Drain hole

© 2025 Axopar Boats

The drain holes must be open at all times. Clean the holes regularly by removing any accumulated debris to prevent clogging.

The system is built so as to drain the water from the deck in normal use. Do not close the taps when using the boat or when the boat is attached to the dock.

In the cockpit and driver's floor there are draining holes on both sides of the floor. Cockpit draining holes are equipped with seacocks located on transom. Driver's floor drains to a container located in front of the toilet. There is a water pump that pumps water out from the container.

NOTICE

The self-emptying open space is meant for the removal of such water that ends up on the deck through rain, splashing or from breaking waves. A part of the rain water as well as water condensation in the bilge may end up in the bilge.

- Do not leave the boat unattended in the water for a long time.
- Observe the floating position of the boat and empty the bilge when necessary.

Leaving the boat unattended in the water for a long time may cause damage.

4.1.2 Openings in the hull and deck

There are several inlets through the boat that include valves for opening and closing such inlets. It is recommended to keep these inlets closed if the boat is out of use for a long time, and to open them again when the boat is used again. If the boat is lifted out from water or in rainy conditions, inlets should be kept open.

Always check that all hatches are securely closed before and after using the boat.

We recommend that you keep the windows, doors, deck hatches, roof hatches, vents and interior doors closed while driving. In stormy weather, always keep them securely closed to minimize the risk of water getting into the boat and to avoid any personal injuries.

In certain conditions and speeds, it is possible that water is sprayed inside through canopies, hatches or other openings, due to negative pressure or other effects. Risk for this can be minimized by closing the canopies, hatches or other openings.

⚠ WARNING

All doors and hatches must be kept shut when under way.

© 2025 Axopar Boats

The figure shows the hatches and seacocks that must be kept closed when the boat is left unmanned. Keep hatches closed also while underway.

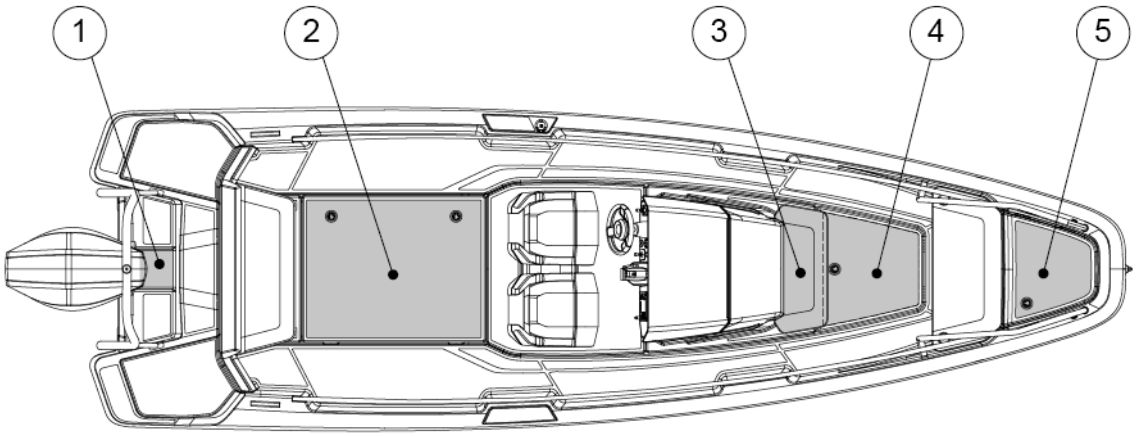

(1) Inspection hatch in the engine bracket
(2) Floor hatch or multistorage roof hatch
(3) Console door
(4) Storage box hatches
(5) Front storage box

The location and number of these components depend on the level of the equipment on the boat.

© 2025 Axopar Boats

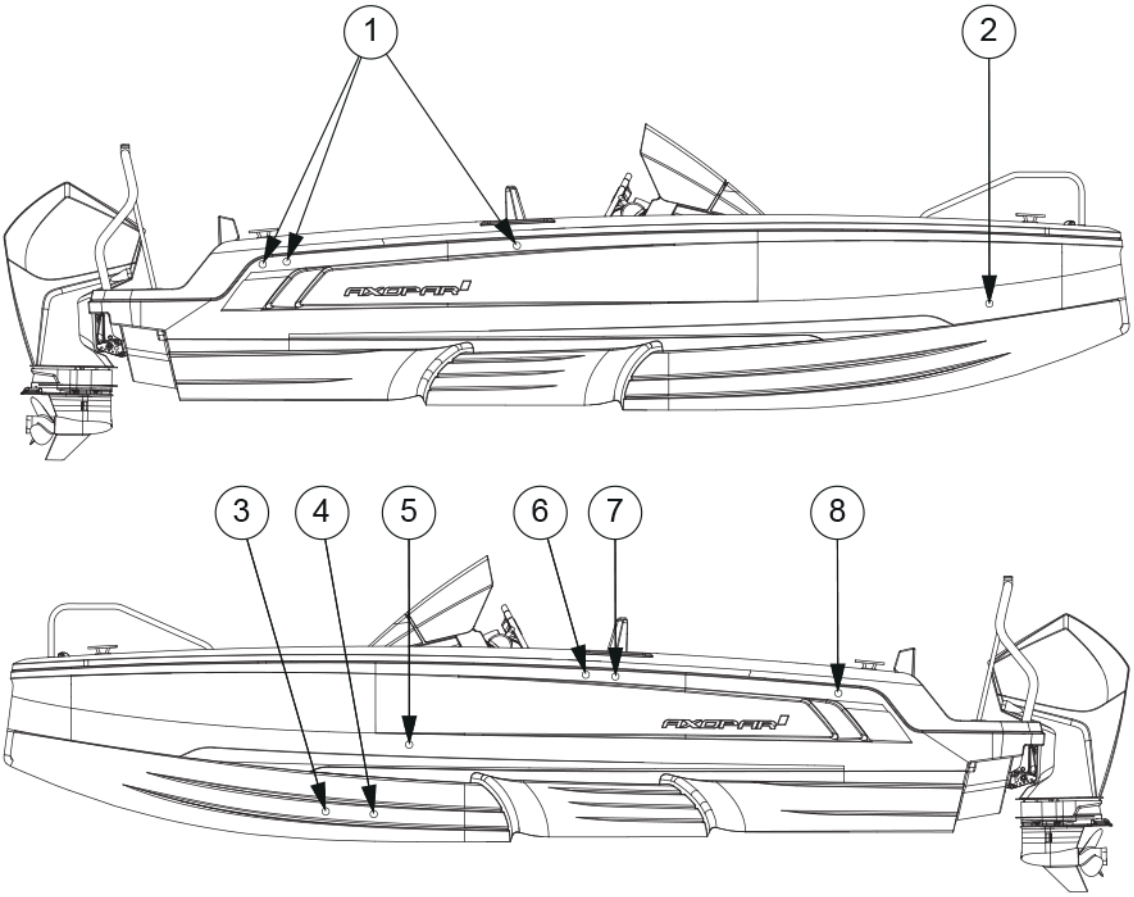

(1) Bilge outlets
(2) Anchor box drain
(3) Waste water outlet
(4) (Transducer)
(5) Sink outlet
(6) Fuel tank vent (EPA system only)
(7) Waste water tank vent
(8) Fresh water tank vent

4.1.3 Bilge system

The bilge system is designed to enable keeping the bilge water level at a minimum. The system consists of several pumps that cover all the lower sections of the boat.

The boat is equipped with both manual and electric bilge pumps. The signs on the boat display the draining area of each pump.

The manual bilge pump is controlled with its handle.

The submersible electric bilge pumps are equipped with a float which triggers them automatically if there is water in the bilge space. The electric bilge pumps can also be controlled manually from the switches on the steering console.

© 2025 Axopar Boats

⚠ WARNING

The bilge system is not designed for damage control.

The combined capacity of the bilge system is not designed to pump out the boat in the event of hull damage.

NOTICE

Keep the bilge area clean by washing it ever so often using bilge cleaner or biodegradable soap and water. Clean bilge significantly helps noticing signs of leaks or other problems that may occur.

NOTICE

- Check the functionality of the bilge pumps regularly by manually activating them.
- Remove any waste from the intakes.
- Clear the pump outlets from debris.

If seacocks are fitted in the fore and aft peak bulkheads, keep them closed, and only open to let water drain into the main bilges.

NOTICE

Do not run the pumps dry for a long time. The pumps will be damaged.

NOTICE

Avoid pollution.

Since the bilge system comprises of several automatic and manual pumps that cover all areas of the boat, the risk of accidental discharge of contaminated water by automatic pumps needs to be minimized.

Mitigate the risk by checking the bilge water regularly for contaminants such as oil, diesel, and glycol.

Before every use

Make sure that:

- The bilge pumps can operate freely, and there are no objects blocking operation.
- Water can flow through the strainer, and there is no muck or material restricting the water flow.

  Clean the strainer by pushing the lock tabs in the pump motor and lifting the motor unit off.

4.1.3.1 Bilge pumps and outlets

Bilge pump output

- The manual bilge pump output is 35 liters (9.2 gallons) per minute.
- The automatic bilge pump output is 50 liters (13.3 gallons) per minute.

Bilge pump locations

The manual bilge pump's control handle is located in the aft sofa or the aft of the multistorage.

The electric bilge pumps are submersible. One electric bilge pump is located in the stern of the boat, and the pump is accessible through the inspection hatch in the engine bracket.The second electric bilge pump can be accessed through the toilet compartment.

© 2025 Axopar Boats

The electric pumps are by default in automatic mode and pump out the bilge once the float-switch is triggered. The electric bilge pumps can also be started manually from the boat's main control panel.

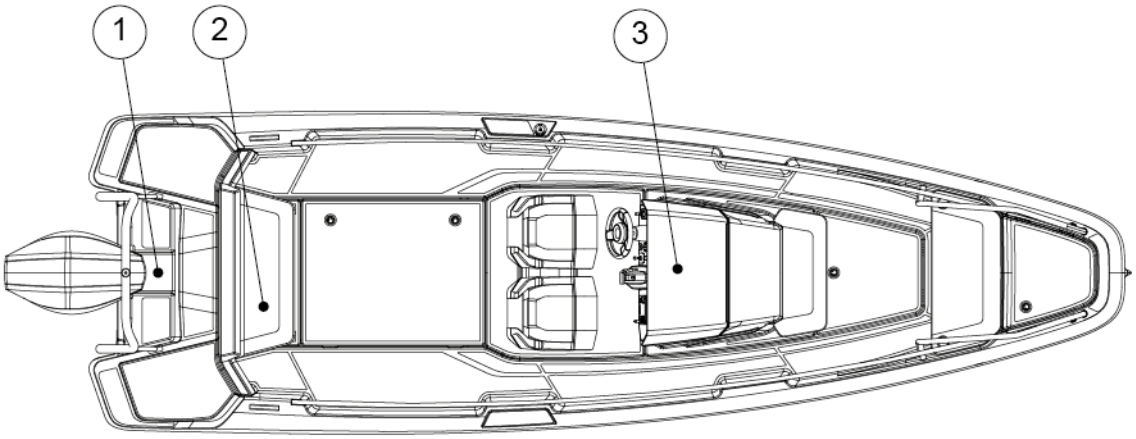

(1) Aft electric bilge pump
(2) Manual bilge pump
(3) Front electric bilge pump

The figure shows the seacocks and inlets through the side. Always check in the spring when launching that the inlets through the side and bottom are tightly closed.

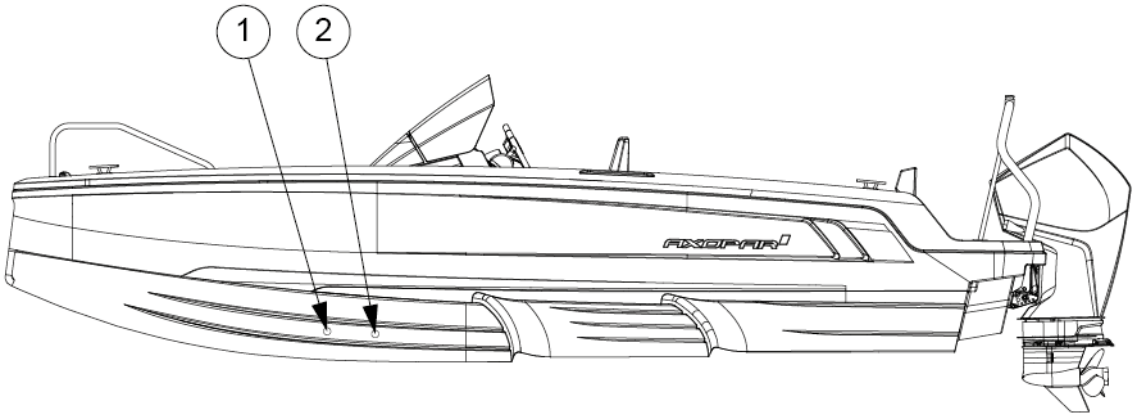

(1) Waste water outlet
(2) (Transducer)

© 2025 Axopar Boats

4.2 Technical systems

4.2.1 Electrical system

⚠ WARNING

Risks of fire, explosion and electric shock!

Improper use of electric DC and AC systems may result in fire, explosion or electric shock.

Follow the instructions carefully.

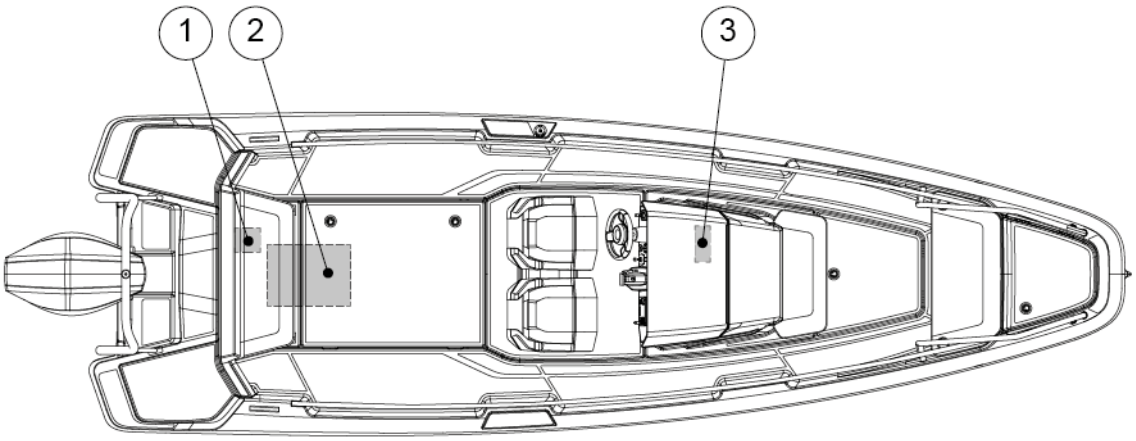

(1) Main switch panel
(2) Batteries
(3) Fuse panel

4.2.2 12V system

The boat's equipment uses the 12V system.

The 12V system consists of engine driven alternators, batteries and equipment. The power is supplied to the batteries via diodes from either the engine alternator or the shore power charger.

To activate the circuits in the 12V system, the main switches for the corresponding circuits need to be activated and the fuses intact. When the electronic circuit is switched on, the equipment can be operated from the main switch panel.

© 2025 Axopar Boats

⚠ WARNING

- Never switch off the main switch when the engine is running, because this may cause damage to the alternator.
- Never carry out electrical installations when the power is switched on.
- Never modify the boat's electrical system or diagrams. Service and maintenance must be carried out by a qualified electrician.
- Never alter or modify the rated amperage of the overcurrent protective devices.
- Never install or replace electrical equipment with components that cause the circuit's nominal rated amperage to be exceeded.
- Never leave the boat unattended with the electrical system energized, except automatic bilge pump, fire protection, and alarm circuits.
- Maintain any damaged equipment before taking it back to use.

4.2.3 Main switches

The different electronic circuits of the boat are controlled by the main switches on the distribution board.

The main switches allow the batteries to be disconnected from all devices that consume electricity. When the main switches are in the On position, the current is conducted to the distribution board and from there to different parts of the boat.

The background color of the main switch and the text **On** shows that the electronic circuit is switched on, and when the circuit is switched off, the background color is red and the text says **Off**.

When you leave the boat for any length of time, switch off the current from all main switches. Devices that constantly need current are active regardless of the position of the main switches.

The design drawing of the boat's electrical system is presented in ***Appendix II***. The main switch is located under aft seat. In the main switch panel are direct supply switches for critical equipment and main switches for the start batteries, the service battery and the Aux battery.

Current feed to the engine is achieved by turning the Start switch to the On position, and feed to other equipment is achieved by turning the Service switch to the On position.

© 2025 Axopar Boats

Single battery system

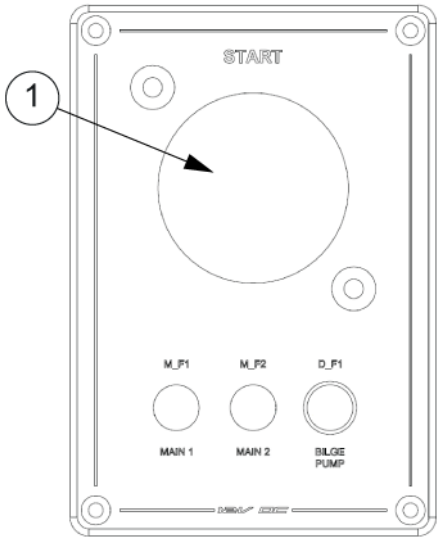

(1) Start battery

Dual battery system

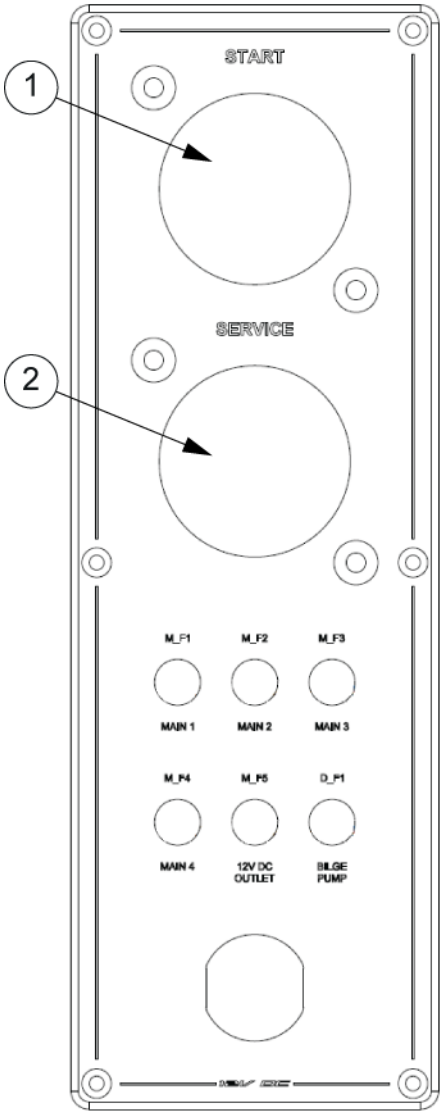

(1) Start battery
(2) Service battery

4.2.4 Direct supply fuses

Some of the devices in the boat are supplied by direct supply switches. Direct supply switches are intended for such equipment that need current when the main switches are turned off.

When pushed down, the switch is on and when pushed up it is off. The switch indicates a short circuit or interference in the electronic circuit by springing up to the “off” position. The switch can be reconnected by pushing it back down to the “on” position. Do not reconnect the switch before you have found out the reason for the interference.

© 2025 Axopar Boats

The direct supply switches must be left on even if the current from other circuits is switched off. An appliance that is switched off too early may cause the appliance to overheat and become damaged.

The switches are located in the main switch panel.

⚠ WARNING Turning the direct supply switch off too early may cause the device (for example, the heater) to break or catch fire, because the devices have a ventilation feature that works even if the device is otherwise switched off.

- Make sure the device is cooled down before turning it off completely. For more information, see the manual of the device in question.

4.2.5 Fuses

The fuse panel includes fuses for the boat's equipment. The fuse panel is located in the toilet room.

The fuses are in the form of trip switches that break the circuit and spring up when tripped. Do not reset the switch before you have found out the reason for the breaker tripping. After that press the switch back down.

The panel has a combined switch and fuse for the macerator and the fresh water pump. The fuse panel also has a 12V output.

⚠ WARNING Before connecting an electric circuit, make sure that the circuit is not damaged and that there will be no short circuit or a fire caused by possible damages in the electric circuit. Any damaged equipment must be maintained or changed before they are again taken into use.

Fuse panel in single battery system

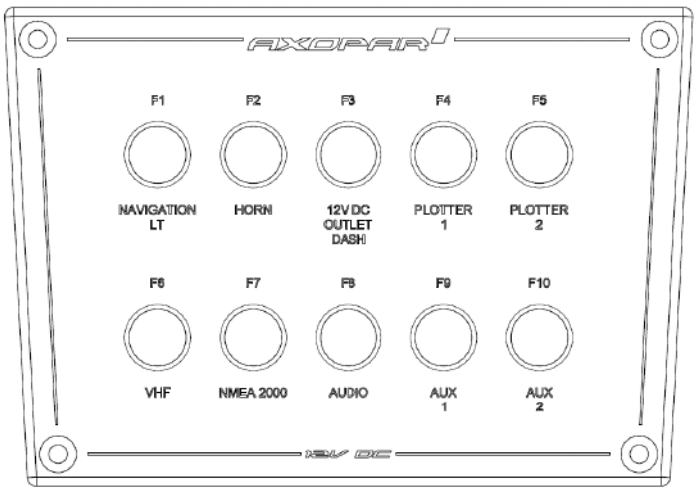

© 2025 Axopar Boats

Fuse panel in dual battery system

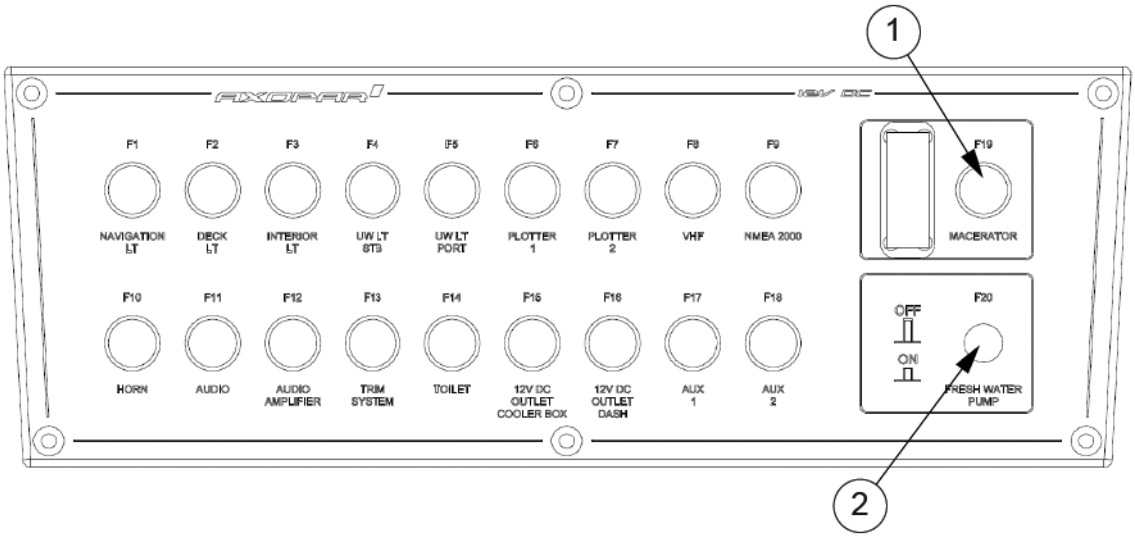

(1) Macerator pump switch and fuse

(2) Fresh water pump switch and fuse

4.2.6 Heavy duty fuses

There are fuse panels containing fuses for appliances and electronic circuits which require large currents in the boat.

The functioning of fuses can be checked from the holes in the fuse's cover. If the metal strip visible in the hole is unbroken, the fuse is operational.

If the metal strip is damaged, meaning that an overload has occurred, contact a qualified nautical electrician.

⚠ WARNING

Opening the cover is not recommended, as there is a danger of electric shock and serious injury.

If the metal strip is damaged, contact a qualified nautical electrician. If it is necessary to open the cover, make sure that all the current cables from the batteries are disconnected.

4.2.7 Batteries

The standard boat is equipped with a start battery only, and a service battery is optional (dual battery system).

The start battery supplies current to the engine and engine-related equipment, and the service battery for other appliances and equipment on the boat.

© 2025 Axopar Boats

The batteries are located in the aft of the boat. The exact location of the batteries is presented in the section ***Electrical System***.

⚠ WARNING

Only use maintenance-free AGM batteries in the boat.

- When you leave the boat, switch off the main switches unless the shore power cable is connected.
- Remove the batteries from the boat for winter storage.
  - When removing a battery, detach the negative pole first.
  - When disconnecting batteries, be careful not to touch both poles at the same time with a metal tool.

4.2.7.1 Charging the batteries

⚠ WARNING

- Remove the batteries from the boat for charging.
- Remember that the batteries discharge an explosive oxy-hydrogen gas at a voltage of 14.4 volts.
  - The voltage of a normal battery in unloaded status is 12.3-12.7V.
  - During charging, the voltage increases and the charging regulator stops the charging process automatically at a preset level.
  - The voltage measurement must be taken at the battery terminals, not the alternator, to achieve the correct result.

4.2.7.2 Winter storage

For winter storage, the batteries can be left on board only if they are fully charged.

A partially discharged battery can freeze and crack. Always disconnect the cable terminals from the battery to avoid oxidation. When removing batteries, disconnect the negative pole first and make sure that there are no flammable or explosive materials or liquids nearby. When putting the batteries back in place, connect them in reverse order (positive pole first).

4.2.7.3 Cleaning the batteries

The top of the batteries needs to be cleaned regularly to avoid current leakage between the cells. If the battery is located in a separate area, it is normally sufficient to clean it in the spring and autumn.

Make sure that the air holes in the cell plugs are open so that gas can be vented.

The terminals and cable terminals must be lubricated to prevent deposits and corrosion.

4.2.8 Fuel system

The boat has a fixed fuel system and a water-separating fuel filter on the suction line.

© 2025 Axopar Boats

Instead of the fuel system used in the European region, the boats produced for the American region use the EPA (United States Environmental Protection Agency) fuel system regarding NMMA (National Marine Manufacturers Association) certification rules.

See the fuel system drawing in ***Appendix II***. For care and maintenance of the fuel system, see the instructions in the engine manual.

⚠ WARNING Never start the engines if there is strong gasoline odor present.

⚠ WARNING Risk of fire.

- Do not smoke or handle open flames when refueling.
- Remember that it is not allowed to store fuel in spaces not specifically designed for it. Since there is no ventilated storage space on the boat, possible spare fuel cans must be stored on deck.

Fuel system component locations

The fuel tank is located in the middle of the keel. Prevent damage to the fuel lines.

- The components of the tank, the fuel filter (if available) and the fuel tank valves are located under the driver's seat. The fuel system is equipped with a manual fuel valve.
- The inlet pipe for fuel is located in the port side of the deck.

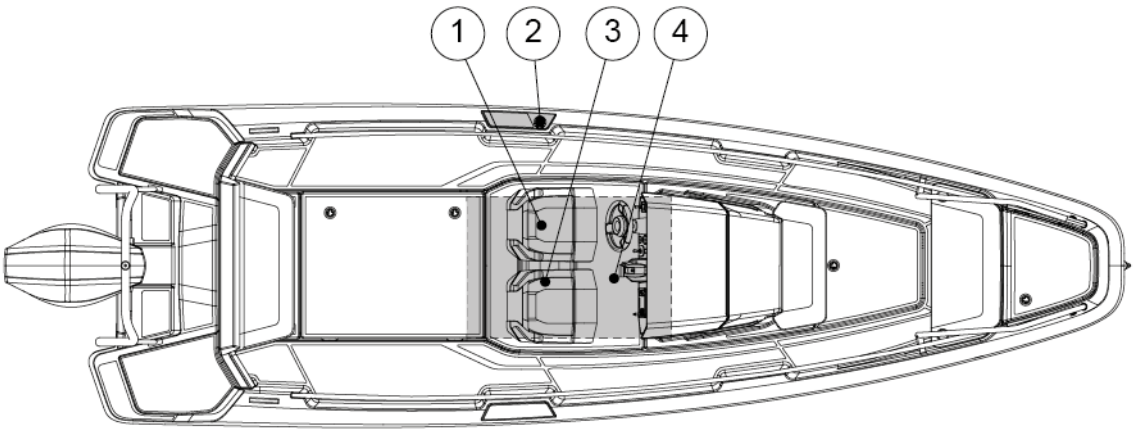

(1) Fuel filter (if available, depending on the engine selection)
(2) Fuel inlet fitting
(3) Manual fuel valve
(4) Fuel tank

4.2.8.1 Refueling the boat

If the boat has optional decking material, wet down the deck with water before refueling. This ensures that any fuel spillage will float on the water and not penetrate the decking material.

© 2025 Axopar Boats

Water reaching the engine's injection system can cause rapid corrosion damage to the precision components in the injection pump components. For this reason, it is vital to check the extra fuel filter regularly for water. Every so often, drain a small quantity of fuel into a suitable container (avoid fuel spillage) and check that there is no condensation water. If there is water in the filter, continue to drain until only clean fuel appears.

The fuel system on the engine is sensitive to air bubbles in the fuel. Always fill the tanks well before they are completely empty. If the system has been run dry, it must be bled before the engine can be started again. See the engine manufacturer's instruction manual before bleeding the fuel system.

⚠ WARNING

- Never block access to safety equipment, fire extinguishers, fuel valves or main power switches.
- Never block any ventilation openings made in the boat because their purpose is to clear the air of fuel fumes.
- Never use a wrong type of fuel in the heater or cooker as this may damage them.
- Never use an open flame when detecting leaks.

4.2.8.2 Maintaining the fuel system

Follow the engine manufacturer’s maintenance schedule.

- Annually, check the condition of the hoses and make sure that there are no visible cracks, abrasion, or deterioration.
- Replace worn parts with genuine, marine-grade parts only.
- Bi-annually and for winter storage, check the fuel tank compartment for possible accumulated water. This can be done by inserting a thin hose through the aluminium pipe at top of the tank. The pipe guides the hose to the lowest part of the fuel tank compartment. The compartment can then be emptied with wet-dry vacuum cleaner connected to the hose.
- Bi-monthly, inspect the fuel system for presence of water in the fuel tank.

  Presence of water in fuel can be checked by inspecting the contents of the fuel filter.

  If any water is found, it must be removed and the whole fuel tank dried before the tank can be refilled with fuel.
- Examine the fuel tank and lines for corrosion and leaks.

4.3 Optional equipment

This section presents the optional equipment and systems available for the boat.

4.3.1 Fresh water system

You can choose to equip your boat with a fresh water system as an optional extra.

The fresh water system consists of a fresh water tank and pump. The boat may also be equipped with a water supply point in the toilet, under the seat, and in the deck shower.

© 2025 Axopar Boats

The tank is located under aft deck. The pump is integrated in the tank. The fresh water tank is filled via the inlet pipe on the aft foredeck.

The fresh water system is turned on by switching on the fresh water pump. The pump switch is located on the fuse panel.

The system maintains a working pressure automatically, which is why the pump does not need to be shut after use.

Switch the system off when leaving the boat. Do not forget to check filter in the pump regularly.

The dealer is responsible for disinfecting the fresh water tank before sale.

NOTICE

The water from the system is not meant for drinking.

The fresh water system must be thoroughly emptied for winter storage.

It is not recommended to use any anti-freeze products in the fresh water system.

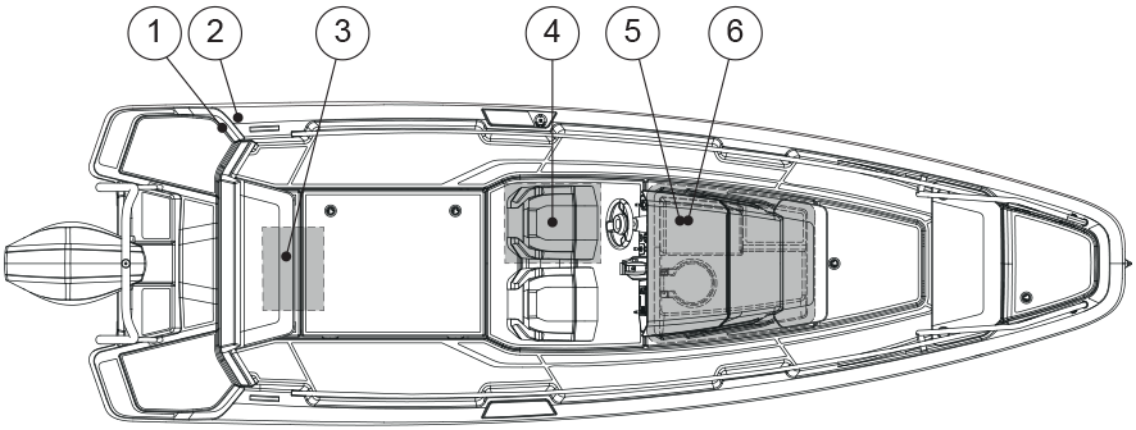

(1) Water inlet fitting
(2) Deck shower
(3) Water tank and pump
(4) Sink
(5) Toilet tap
(6) Fresh water pump switch

The water pump has air release valve which should be slightly opened to facilitate priming when starting the pump or emptying the tank. Once the pump operates normally, the valve should be closed.

© 2025 Axopar Boats

The water pump has also two LEDs indicating the operating status and faults in the pump operation. For more information about the signals, please refer to manufacturer's manual.

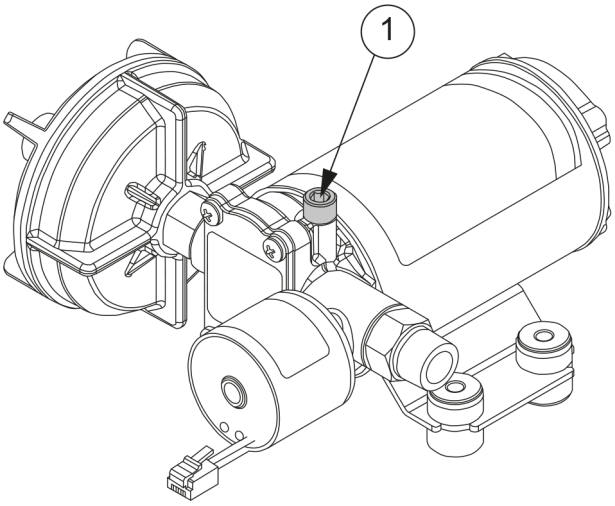

Figure 4.1 Water pump and air release valve

Freshwater system needs to be disinfected and flushed annually or after longer periods of non-use to keep the system in working order.

Disinfection procedure is described below:

1. Flush the entire system thoroughly by running potable water to flow through it.
2. Drain the system completely.
3. Fill the entire system with disinfecting solution and follow the manufacturer's instructions.
4. Drain the entire system once disinfection process is complete.
5. Flush the entire system thoroughly several more times with potable water.
6. Fill the system with potable water. Freshwater system is now ready to be used.

Maintenance

Annually inspect hose connections, tube fittings and pump electrical wiring connections for proper securing and no chafing. Water pump inlet filter is recommended to be checked and cleaned annually. Running the system regularly helps keep the water pump's impellers in working order.

© 2025 Axopar Boats

4.3.2 Septic system

The boat's septic system consists of the toilet seat, the septic tank and the related systems.

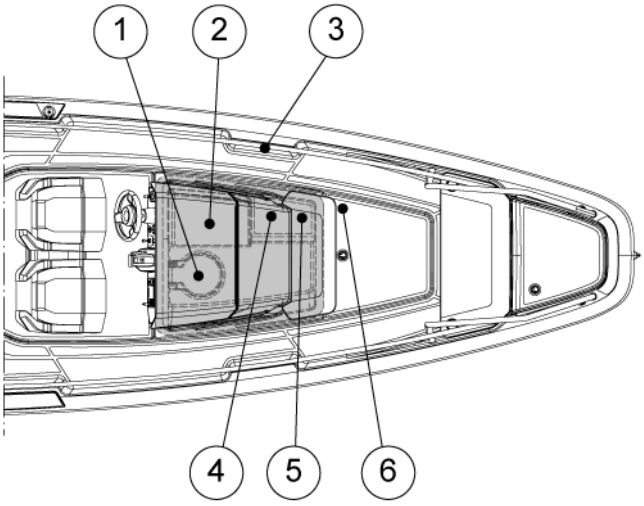

(1) Toilet seat
(2) Septic tank
(3) Septic macerator
(4) Toilet flush water inlet and septic tank seacock
(5) Toilet seat pump
(6) Septic tank suction fitting

Maintaining the macerator

The macerator pump can get stuck if it is not used for extended periods of time. Regular use of the macerator helps to prevent this from happening.

If the macerator pump gets stuck, please contact your dealer for repairs.

4.3.2.1 Toilet seat

The boat can be equipped with two types of toilets. The manual toilet seat system uses seawater, and the electrical toilet seat system uses fresh water.

NOTICE

- Never put any other objects but toilet paper in the toilet.
- In order to avoid damages, you must also not pour hotter than lukewarm water into the toilet.
- It is under no circumstances allowed to flush paper towels, fabric or rubber products, hard objects, oil products or solvents down the toilet.

© 2025 Axopar Boats

Using the manual toilet

- Before using the manual toilet, open the water intake cock, which is located behind the service hatch.
- Close the cock after use.

Using the electrical toilet

The electrical toilet is used with a separate operating switch. For more information on the device, see the manual for the toilet.

Maintaining the toilet

- Clean the toilet with a mild cleaner.
- Never use cleaning agents or deodorants which contain pine oil, formaldehyde or chlorine, nor corrosive or petroleum-based agents.

  These materials can damage the plastic and rubber parts in the toilet.
- Lubricate the pump shaft with Vaseline to increase the service life of the seal.
- Flush the toilet system thoroughly with fresh water when the boat is not in use.

4.3.2.2 Septic tank

Avoid environmental pollution!

The blackwater tank is fitted with a deck outlet pump using an international standard type connection. Using the pump, the black water can be emptied to a permanent septic tank ashore. These facilities must always be used.

In areas where there are no permanent septic tanks, the macerator is used to evacuate the contents of the tank straight into the water as follows: Open the sealed seacock. If possible, empty the tank daily and always in deep waters far from the shore. For the location of the pump, see the section ***Septic system***.

The shut-off valve must be closed after the evacuation.

Do not allow the tank to become full. It can lead to paper becoming compacted in the bottom of the tank, making it more difficult to empty.

NOTICE

Before the boat is laid-up for winter storage, the whole system must be cleaned and flushed thoroughly while the boat is still in the water.

The whole system must be thoroughly drained of water when the boat is lifted out of the water.

This measure prevents frost damage, bacteria growth and smells.

Use of antifreeze is not recommended, since it is impossible to guarantee that it reaches all parts of the system.

© 2025 Axopar Boats

5 Transportation

5.1 Lifting the boat

Lift the boat only with a lifting beam and lifting straps. Use the specified locations for the lifting straps.

Commission only a reputable lifting company or a boat yard with sufficient lifting capacity to lift the boat. Make sure the company has full insurance cover, in case of any damages.

⚠ DANGER

Risk of serious injury or death by falling load.

- Do not stay under the boat when it is hanging in the crane.

Lift straps may slip on the hull. When appropriate, tie the straps together before lifting.

The position of the straps may need to be adjusted depending on how the boat is loaded.

In addition to the boat's own weight, take into account the equipment and other possible loads in the boat.

⚠ CAUTION

Note the location of the log transducer to avoid damaging it.

- Protect the hull sides well to avoid damages.

The lifting beam must be exactly the same width as the boat. Always take great precautions near and around the boat when lifting.

⚠ CAUTION

Risk of damage to the hull.

Do not lift the boat with a forklift.

The location of the lift straps is indicated in the figure.

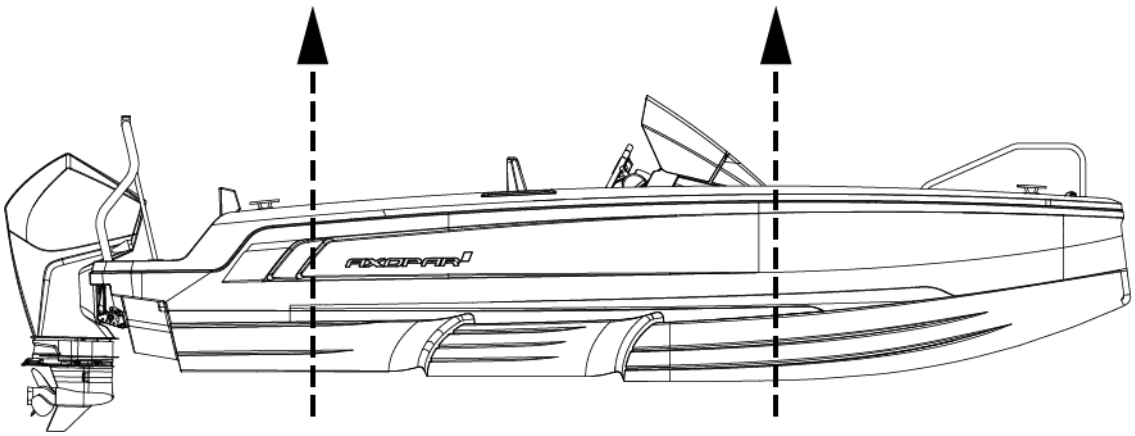

© 2025 Axopar Boats

Before operating any lifting equipment:

- Check and determine applicability of federal, state, or local requirements.
- Follow the lift equipment manufacturer’s requirements and recommendations.
- Check the boat's lift points, weight and other information.
- Straddle lift operation is a highly technical area that requires trained and experienced operators.

During lifting:

- Check the boat for bilge water before lifting.

  Excessive quantities of bilge water can shift, changing the balance of the load.
- Check for thru-hull appendages such as knot meters and stabilizers, rub, spray, and splash rails, so that they are not damaged by the lifting equipment.
- Check the hull structure to locate shafts, rudders, struts, and the forward and aft ends of any keels.
- Check the hull’s structural configuration, including the location of bulkheads, stringers, engines, and tanks.
- Check bilges for water ingress following launch.
- Transport the boat as close to the ground as practicable.

5.2 Transporting and storing the boat

Before lifting the boat onto the trailer, make sure that the trailer is suitable for the boat.

Make sure that there is a sufficient number of supports to distribute the weight properly without excessive point loads, and the capacity and dimensions of the trailer are sufficient to carry the boat and its engines, equipment, battery, boating accessories and fuel on board. Pay special attention to exposed areas and edges of hull, such as strakes and steps in the hull, during loading, deloading and transportation.

⚠ WARNING

A boat trailer that does not have sufficient capacity or that is poorly maintained can become damaged and cause a danger on the road.

- Make sure that the trailer capacity is sufficient to also carry the weight of the engines, fuel and equipment.

⚠ CAUTION

The hull of the boat can be damaged if there is an insufficient amount of supports on the trailer or during the storage.

The trailer must be a little nose heavy. Make sure that the boat is securely fastened to the trailer, that it cannot move into any direction, and that the side supports provide an even support for the weight of the boat.

Before loading the boat on the trailer:

- Remove any unnecessary weight from the boat.
- Drain the bilge water.
- Adjust the side supports of the trailer so that the most weight rests on the keel supports, and the side supports only offer lateral support.

© 2025 Axopar Boats

- Protect the boat by placing suitable padding between the tie down straps and the boat, if necessary.
- See the engines manual for any instructions on trailering.
- Make sure that the doors and hatches are properly closed.
- Pay attention to any equipment and accessories in the boat during trailering.
  - Make sure you secure all loose items in the boat.
  - Do not use a hood, canopy, tonneau cover or other similar top or cover on the boat during trailering.

    These hoods and covers can become detached at high speeds and damage the boat and cause a danger to traffic.

    A hood or other cover flapping in the wind during trailering can damage the boat surface.
  - Keep the hood in its dedicated storage compartment during trailering, or remove the hood completely, if necessary.

Boat storing

- Make sure that the bow is slightly elevated when in storage, to help potential water escape the deck.
- Make sure the boat is steadily positioned and secured. The weight of the boat needs to rest on the keel.
- Protect the areas of the hull and deck being supported with some form of padding.
- Keep the engines in a downward position.

© 2025 Axopar Boats

6 Operation

The boat owner must take local and international regulations into consideration concerning the boat crew, equipment and handling of the boat. In some countries, a driving license or a separate authorization is required for driving the boat. Special regulations may also apply.

Ensure that the anticipated wind and wave conditions do not exceed the design category of the boat, and that the crew is able to handle the boat in these conditions. Even though the boat is designed for such conditions, they can still be very dangerous. Only a capable, fit and trained crew, using a well maintained boat, can satisfactorily operate in such conditions.

If the boat is fitted with a life raft, carefully read its operation manual. Onboard, the boat must have the appropriate safety equipment according to the boat type and weather conditions. This equipment is compulsory in some countries. The crew must be familiar with the use of all safety equipment and the most important actions in different emergency situations. Sailing schools and clubs regularly organize rescue drills.

The equipment in the boat may differ from the equipment used in the figures in this manual. This might be due to any optional equipment chosen or modifications made after producing this manual. In such cases, contact your local dealer for the operation instructions and additional information regarding the operation of the equipment in question.

Always maintain the boat properly and make allowance for the deterioration that occurs over time and as a result of heavy use or misuse of the boat. Any boat, no matter how strong it may be, can be severely damaged if not used properly. Inappropriate use of this boat not compatible with safe boating is not allowed. It is always important to adjust the handling of the boat to the sea conditions and own boating experience. The gelcoat parts, especially the colored parts, need to be polished and waxed approximately every fourth months to prevent the parts from fading or getting other visual defects.

6.1 Handling devices

6.1.1 Steering console

The controllers are situated so that the driver can easily manage them from the steering console.

The location and quantity of the devices depend on what optional equipment and engine models have been chosen. See the device manuals for further information on the devices.

© 2025 Axopar Boats

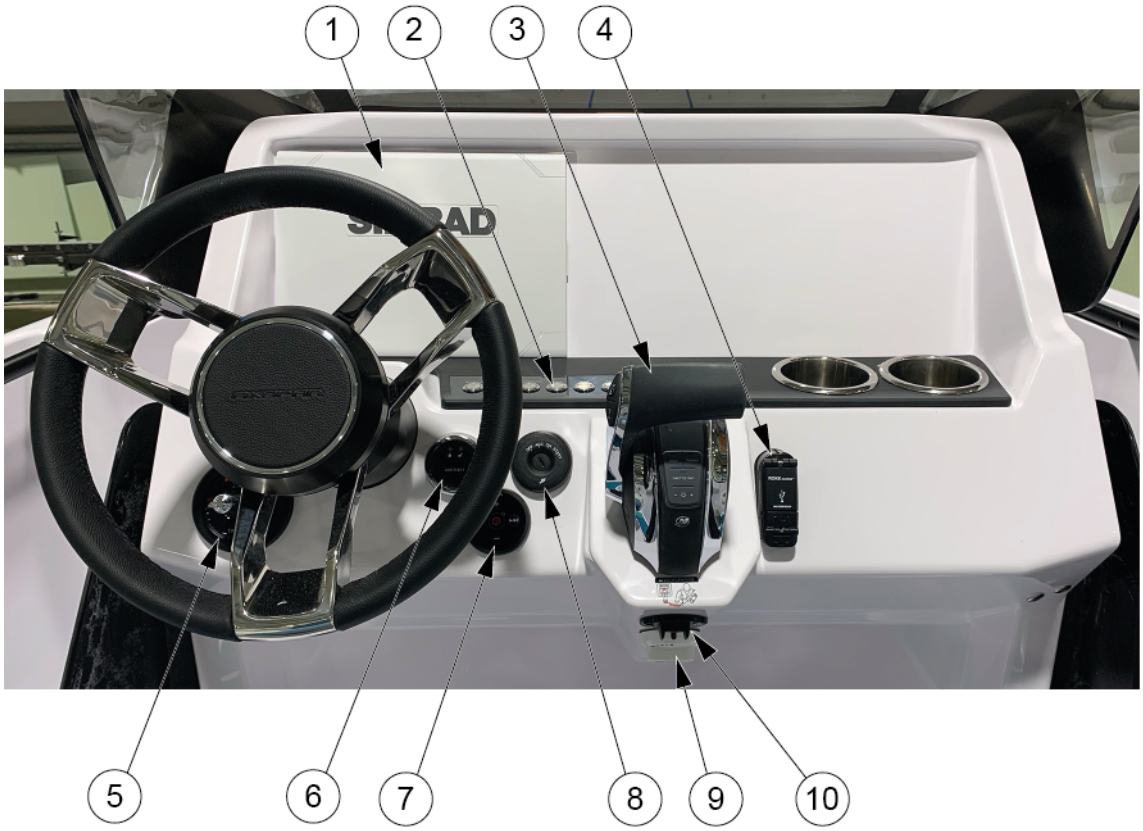

(1) Chart plotter
(2) Steering console switch panel
(3) Engine remote control
(4) USB charging port
(5) Trim tabs joystick
(6) Theft deterrent system (TDS)
(7) Audio system remote control
(8) Key switch
(9) Diagnostic port
(10) Lanyard stop switch

© 2025 Axopar Boats

6.1.2 Steering console switch panel

Steering console switch panel in the single battery system

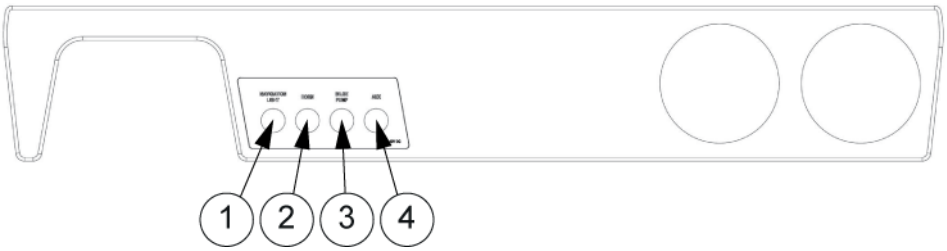

(1) Navigation light
(2) Horn
(3) Bilge pump
(4) Aux

Steering console switch panel in the dual battery system

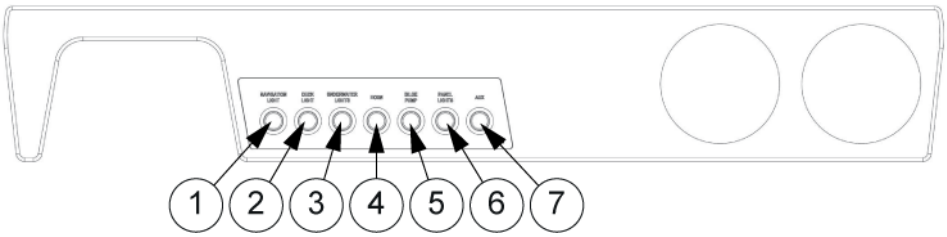

(1) Navigation light
(2) Deck light
(3) Underwater lights
(4) Horn
(5) Bilge pump
(6) Panel lights
(7) Aux

6.1.3 Steering system

The steering system is one of the most vital systems related to safe boating.

The boats are equipped with a hydraulic steering system with the alternatives of power steering and non-power steering systems. Please refer to the collateral manuals provided by the outboard engine and steering system manufacturer included in the manual package provided with the boat.

The non-power steering system consists of a steering wheel, a helm pump, a hydraulic hosing, and a hydraulic steering cylinder.

The power steering system includes a steering pump to help with the handling of the vessel.

© 2025 Axopar Boats

6.1.3.1 Checking and topping up oil

Effective and properly working steering is crucial for the safety of the boat.

- Check the oil level in the pump before casting off.
- For detailed instructions and the steering system oil recommendation, see the manufacturer's documentation.

6.1.3.2 Steering maintenance

For the regular maintenance of the steering system components, please refer to supplier’s manual.

If you encounter issues beyond regular maintenance needs, please contact your boat dealer immediately for service.

6.1.4 Throttle lever

The engine throttle and shift are controlled by the electronic throttle lever. To start the engine, the lever must be in the neutral position. The throttle lever is used to control the engine’s RPM which affects the speed of the boat.

Moving the lever forward shifts engine into the forward gear, and moving the lever backwards shifts the engine into the reverse gear. Progressively moving the lever in one direction will increase the speed of the boat in that same direction.

For detailed guidelines about safe boating and component maintenance, please refer to the provided outboard engine literature. If you encounter issues beyond regular maintenance needs, or if noticeable failures occur, please contact your boat dealer immediately for service.

⚠ WARNING Always make sure no one is close to the propeller when starting the engine or engaging the propeller! Acknowledge the information provided on the helm’s warning labels.

6.1.4.1 Trim and tilt

The engine can be raised or lowered with the trim controls in the throttle lever.

Raising and lowering the engine is needed when trailering or launching the boat. Adjusting the trim angle of the engine also allows optimizing the run angle for the boat to achieve optimal performance or fuel efficiency.

When raising the engine(s) all the way, make sure the engines are facing straight aft, and no optional equipment such as foldable seats or aft deck gates are in the way.

Refer to the supplier’s manuals for detailed operation instructions, maintenance, and warranty information.

⚠ WARNING Raising the engines out of the water without paying attention to surrounding equipment such as aft deck gates, foldable seats or waterski frame may cause damage to the engines.

© 2025 Axopar Boats

6.1.5 Starting the engine

See the engine manufacturer's manual for engine information.

1. Set the engine lever in neutral.
2. Turn the ignition on and check the fuel level.
3. Start the engine by turning the ignition key.
4. Check that the gauges for oil pressure and voltmeter show normal values.
5. Run the engine to operating temperature at idling speed. Never rev up a cold engine.

⚠ DANGER

Risk of carbon monoxide poisoning.

Be aware of the risks with engine exhausts. For example, under turbulence or disadvantageous wind conditions, exhaust can enter the boat. If this happens, avoid idling the engines. If these problems occur under way, do not open the hatches and ventilators, as it can worsen the problems. Instead, you may try solving the problems by changing the boat's speed or weight distribution.

⚠ WARNING

Never step onto the swim ladder when the engine is running. Stop the engine while the steering and propeller are being inspected.

⚠ WARNING

Do not operate this boat with an engine that exceeds the maximum engine power recommended by the manufacturer.

6.2 Swivel seat - Driver and passenger seats

The driver and passenger seats are operated with locking handles.

⚠ DANGER

The locking handles must be in the locked position before the boat speed exceed 5 knots.

© 2025 Axopar Boats

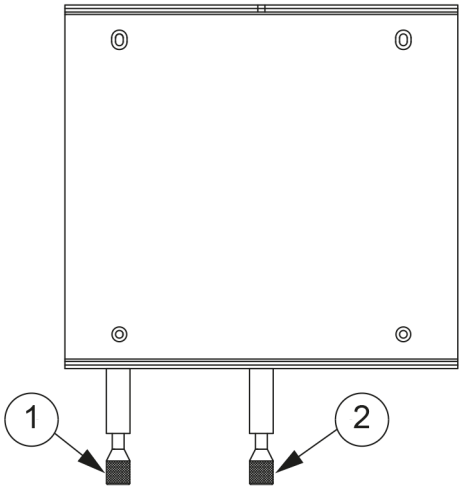

(1) Rotation locking handle
(2) Moving locking handle

- For the rotating function, press the locking handle down to release the lock.

  This allows you to rotate the seat on the post.
- For the moving function, lift the locking handle up to release the lock.

  This allows you to move seat from back to front.

6.3 Inspecting the boat

Due to safety reasons, the below listed inspections must be carried out before and after using the boat.

6.3.1 Checklist: Regular inspection before leaving harbor

Safety

Make sure that:

- All the people onboard have life jackets.
- The wind and wave conditions do not exceed the design category of the boat.
- The dead man's switch is switched to driver.
- There is a fire extinguisher (or several) onboard and their approval/inspection date has not expired.
- The needed ropes and anchor are onboard.

Draining and tightness

Check that:

- There is no water in the bilge.
- All the bilge pumps are functional.
- The bilge has no signs of fuel or oil leaks.

© 2025 Axopar Boats

- The deck drain system is clean and the valves are open.
- All deck hatches are tightly closed.

Electrical and engine

Check that:

- All the fuses are intact.
- The main switches are switched on.
- The batteries have enough power.
- The engine works properly.
- The engine cooling water flows as expected.
- The fuel level is sufficient.

⚠ WARNING The specified tank capacity is not necessarily fully available, depending on the trim and load on board. The tank must always be kept at least 20% full.

6.3.2 Checklist: After using the boat

Make sure that:

- The main switches are switched off.
- The septic tank discharge valve is closed.
- There is no water in the bilge.
- The bilge pumps are functional.
- The deck draining works properly and all the draining valves are open.
- All deck hatches, roof canvas and doors are tightly closed.

6.4 Handling the boat

6.4.1 Checklist: Boat handling before leaving harbor

For safe navigation under all weather conditions, proper sound signaling equipment in compliance with regulations (COLREG, 1972) must be carried on board. Make sure that the sound signaling equipment on the boat is compliant with these regulations.

© 2025 Axopar Boats

⚠ CAUTION According to national regulations in some countries, it is a legal requirement to wear a life vest at all times.

- Check that the boat and its equipment are in seaworthy condition.
- Always listen to long-term weather forecasts when planning longer trips.
- Always make sure there is enough fuel and freshwater in the tanks.
- Check that all items on board are properly stowed and adequately secured to manage rough sea and wind conditions.
- Make sure that the swim ladder is raised out of the water before moving off.
- Make sure that the steering is correctly positioned before starting.
- All persons on board must wear an appropriate life vest when on deck.

6.4.2 Leaving the jetty

Before casting off, consider how to best leave the jetty.

- Check what the wind direction is.
- If the boat has two engines, move away from the jetty by engaging the engine nearer the jetty astern at idling speed and engaging the other engine ahead at idling speed on.
- The boat will swing out from the jetty astern. As the bow will move against the jetty, fend off properly.

With only one engine this can be a little more challenging, especially if the wind is pressing the boat firmly against the jetty, you have to use a spring to get the stern out.

- Firmly fend off the bow from the jetty.
- Take a line from the bow around a bollard or cleat, so that it can be easily let go.
- Engage idling speed ahead and turn the rudder so that the stern glides out from the jetty.
- When the boat has reached a position, where it can safely be reversed, release and retrieve the line, quickly center the rudder and engage astern.

⚠ CAUTION Gather in all lines and fenders while you are still in sheltered water. A rope around the propeller can disable a boat.

6.4.3 Driving the boat

Going out in a motor boat involves responsibility not just to those on board, but also to others we meet on the water. Showing consideration for others makes boating comfortable. Everyone has the same right to be at sea, whatever kind of boat they go afloat in.

The physical laws that apply to a boat are rather different from, for example, those affecting a car, as are the possibilities of controlling it.

You can influence a boat's behavior and the level of comfort on board primarily by adapting the speed to the prevailing sea conditions and by the intelligent use of the trim tabs. A planing boat rides almost level in the water at maximum speed. As the speed of the boat is reduced the trim angle increases and the bow rises slightly. This is normal, and is a prerequisite for good performance.

© 2025 Axopar Boats

6.4.3.1 Dead man's switch

If the boat is equipped with a dead man’s switch, attach its lanyard to yourself immediately after detaching the mooring lines. For more detailed instructions, see the engine manual.

It is very important that the boat stops if you for some reason fall overboard or stumble on board, particularly if you are alone. However, remember to detach the lanyard from your wrist before docking or beaching operations to prevent the engine from stopping unintentionally.

6.4.3.2 Driving at high speed

Although the boats have passed the CE requirements for swerve tests at full speed, Axopar Boats does not recommend making sharp turns at high speed. When exceeding a certain speed limit any hull construction might lose its grip. This might lead to passengers hurtling out of the boat, especially in a single engine configuration.

- Do not use the boat if it has an engine with a higher power rating than indicated on the capacity plate.
- Do not drive the boat at high speed if the engine's rig angle is negative (bow down).
- Do not drive at full speed on congested waterways or if the visibility is limited because of weather conditions or waves.
- Reduce your speed and wake as a matter of courtesy, and also for the safety of yourself and others.
- Observe and obey speed limits and prohibitions associated with a swell.
- Follow the rules of navigation and the requirements of COLREG (Convention on the International Regulations for Preventing Collisions at Sea).
- Always make sure that you have the space needed for avoiding collisions and coming to a halt and for evasive maneuvers.
- Always use a dead man's switch if available.
- Reduce speed in high seas for increased comfort and safety.
- Learn the boat's speed potential. Utilize this knowledge for economical and safe cruising.
- Avoid using high speed along with large rudder movements when going astern, because that places great strain on the rudder and steering mechanism.
- Avoid sudden steering maneuvers at high speeds.
- Avoid staying in the bow area when driving at high speeds.

Avoid sudden changes in travel direction at high speed. Let the boat come to a stop, and the engine rev down before shifting between forward and reverse. Otherwise excessive strain is put on the engine, which could cause the engine to stop. In the worst case, sea water may enter the engine.

A right-handed propeller rotates clockwise and a left-handed propeller anti-clockwise, seen from the stern. The rotation of the propeller is critical for steering the boat. The right-handed propeller pushes the stern of the boat to starboard when the engine is engaged ahead and to port when it is going astern. The direction of rotation of the propeller has a major impact on the turning radius. A right-handed propeller gives a smaller turning radius to port than to starboard. This is called the propeller's paddlewheel effect.

The boat's propellers have considerable propulsion power that provides powerful acceleration. Take this into consideration to avoid dangerous situations arising from this.

© 2025 Axopar Boats

⚠ DANGER A revolving propeller is life-threatening to a swimmer or a person who has fallen overboard.

Use the dead man's switch and turn off the engine when someone is climbing on board.

6.4.3.3 Driving in rough seas

Never go out in rough seas, if you are uncertain whether the boat and those on board can cope. Follow these simple rules.

- Be well prepared.
- Remember to secure loose equipment.
- Always have a sea anchor and other emergency equipment easily accessible.
- Avoid breaking seas that can appear close to land and over shallows.
- If there are significant waves, always reduce speed to guarantee the safety of the persons on board.
- Use the trim tab to trim the bow down to reduce hull slamming in a head sea.

In a head sea

- Adjust speed to suit the size of the waves.
- Adjust the trim angle to the size of the waves. Avoid taking seas beam on.

In a following sea

Remember to keep the bow high in a following sea. Avoid crashing through waves, maintain low speed. If necessary, deploy the sea anchor to reduce speed.

Planing boats can be particularly exposed in rough following seas. The stern of the boat rises and the rudder does not answer, so the boat broaches while the bow cuts down into the sea.

6.4.3.4 Maneuvering in narrow channels

When maneuvering the boat in narrow channels, the engine speed must be kept as low as possible so that maneuvers are calm and steady.

In difficult wind and current conditions, more revs might be necessary to make full use of the power of the engine. In these conditions, it is important that maneuvers are made quickly and precisely to prevent the boat from drifting into trouble for example.

A good rule before starting a maneuver under difficult conditions, is to think through the different situations which could arise. Pay attention to the wind and current conditions and decide in advance which maneuver you will make. It is also important to brief crew members on what they need to do in different situations.

Always keep in mind that the stability of the boat may be reduced when towing.

⚠ CAUTION Even a nonslip molding can be slippery to walk on when the deck is wet.

© 2025 Axopar Boats

6.4.4 Visibility from steering position

The International Regulations for Preventing Collisions at Sea (COLREG) demand that a proper lookout is kept at all times, and the *right of way* rule is followed.

The following factors can considerably reduce visibility, among other things:

- Gear trim angle
- Trim tab angle
- Load and load position
- Speed
- Rapid acceleration
- Changeover from displacement speed to planing
- Sea conditions
- Rain and thunderstorms
- Darkness and fog
- Inner lighting when under way in the dark
- Position of curtains
- People and equipment that block the driver's view.

⚠ WARNING Make only small adjustments at a time. Holding down the button for the trim tab for any length of time can result in partial loss of control of the boat.

6.4.5 Using the trim tabs

A boat does not need trim tabs to get up on the plane or to give good performance. However, trim tabs are a very useful aid when used correctly.

There are two situations in particular where the trim tabs need to be used:

- When it is desirable to trim the bow down in a rising sea and at speeds between going up planing and cruising speed.
- When running with a strong beam wind.

A planing boat always leans into a strong side wind. This reduces the boat’s seakeeping qualities, which is why listing to one side needs to be eliminated as far as possible. Lowering the trim tab on the windward side brings the boat back into normal attitude.

For trimming the bow down, both trim tabs are used in parallel. Begin by retracting both trim tabs completely, then lower both of them a little at a time, so that you retain complete control over how the boat is affected. When running with a following sea, both trim tabs always need to be fully raised. The reason for this is that boats have a tendency to “dive” in a strong following sea, which can result in uncontrollable slowing. Therefore you must run the boat with a high bow angle in a following sea.

6.5 Preventing falling overboard

The boat’s working decks are areas where people can move about when the boat is being maneuvered.

© 2025 Axopar Boats

The working deck area is shown in grey in the figure.

With aft sofa

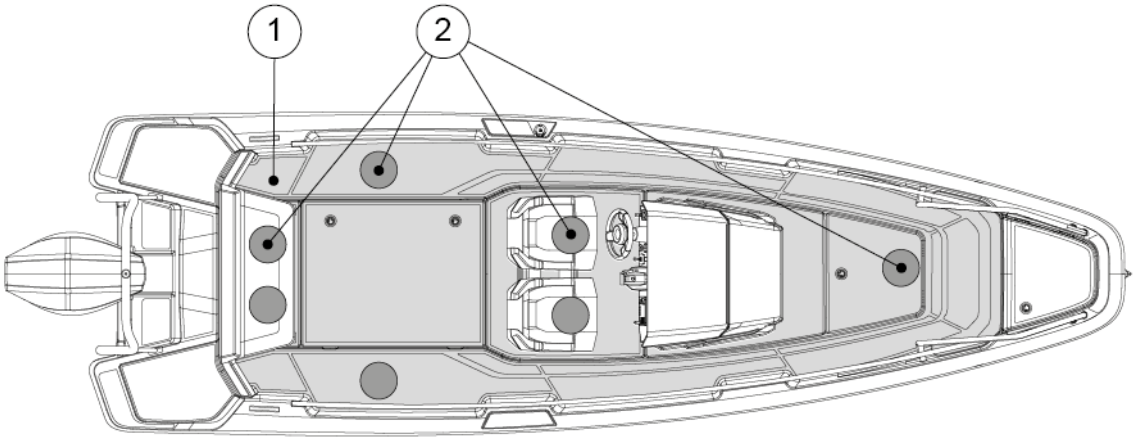

With U-sofa

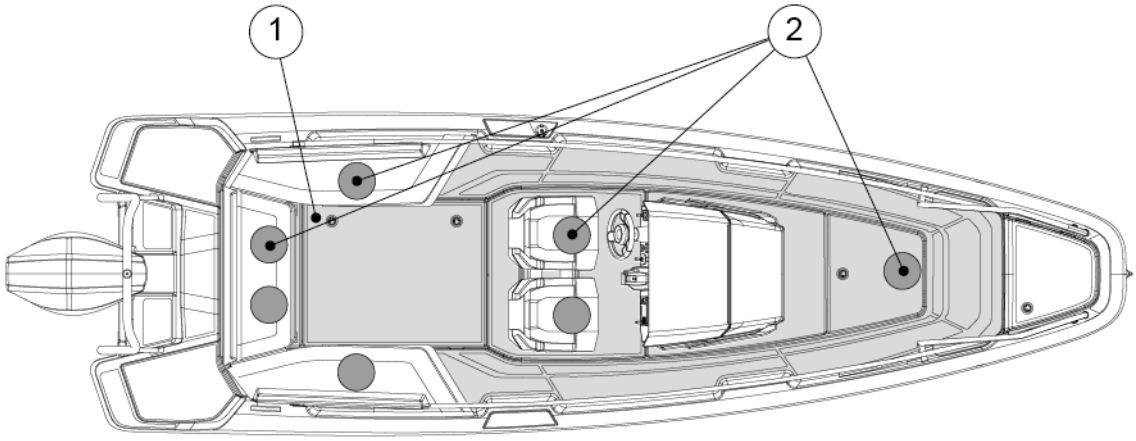

With multistorage compartment

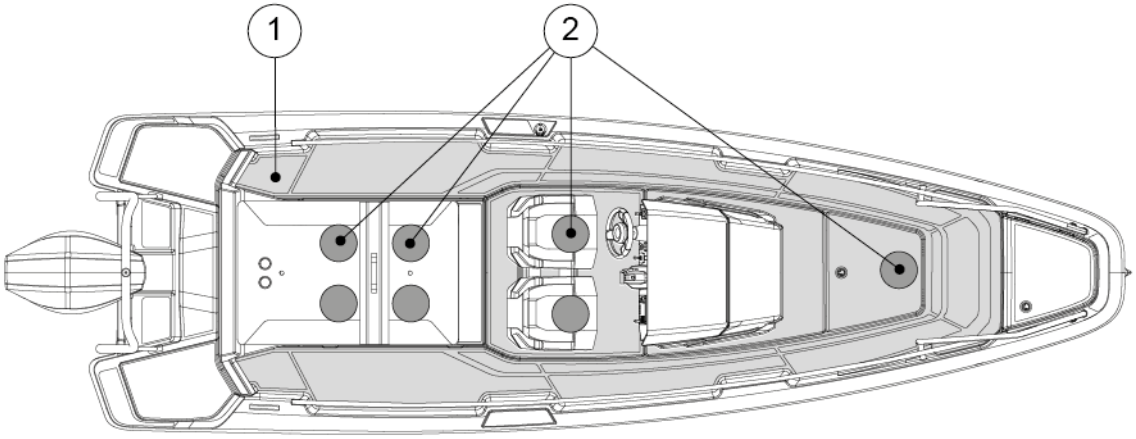

© 2025 Axopar Boats

(1) Working deck area
(2) Seats

Do not sit, stand or spend time in other parts of the boat while the boat is under way.

Moving about in the aft part of the aft deck and on the front deck while the boat is under way is not recommended.

If a person has fallen into the water, the easiest way to get back on board is to use the swim ladder. The ladder can be pulled down also from the water.

Staying on deck

⚠ WARNING Staying in the bow of the boat is not recommended in speeds exceeding 30 knots.

⚠ DANGER A revolving propeller is life-threatening to a swimmer or a person who has fallen overboard.

- Use the dead man's switch.
- Turn off the engine when someone is climbing on board.

If the sun deck cushions or the front deck table are in place, observe the maximum speed of 15 knots to avoid the cushions or table detaching at speed or in high waves.

6.6 Anchoring, docking and mooring

6.6.1 Fastening points

Fastening points (or cleats) are located both at the stern, midship and bow.

- When anchoring or towing, the forward force is 32.2 kN.
- When mooring the forward force is 26.3 kN.
- When mooring the rearward force is 22.5 kN.

© 2025 Axopar Boats

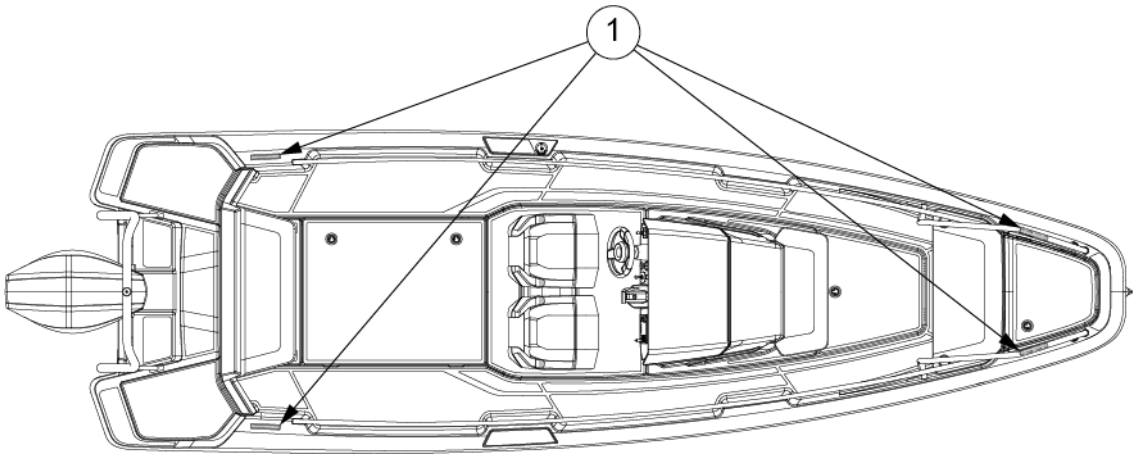

(1) Fastening points

6.6.2 Docking

Always brief your crew how you are planning to dock. Fenders and at least one mooring line fore and aft must be in place before approaching the jetty.

It is always easiest to dock against the wind. Try to hold the bow exactly into the wind and maintain sufficient speed for the boat to answer the rudder. If the bow is blown off in one direction, back out and repeat the maneuver. Bring the bow up to the jetty, and make sure you get a line ashore quickly.

Docking with a side wind is a little more difficult. Do not steer parallel to the jetty letting the boat blow in as there is always a risk of the bow being blown off towards other boats or the jetty. Instead, try to maneuver the boat so that the wind comes directly from astern. Then the boat can be maneuvered straight ahead since the wind helps hold the boat on a straight course. It is good to have someone on the foredeck that can go ashore and quickly turn the bow in the desired direction after the boat has stopped completely.

Try to always avoid sharp movements of the throttle, since idling speed in ahead and astern is generally adequate. Sharp movements of the throttle can lead to panic maneuvers.

⚠ CAUTION The tensile strength of the lines or chains should normally not exceed the strength of the fastening point in question.

6.6.3 Checklist: Before anchoring

1. Check the chart to see if anchoring is permitted in the area.
2. Listen to the weather forecast for the area and take note of the expected wind conditions.
3. Switch on the echo sounder.
4. Study the seabed conditions and make sure that there is good holding ground.
5. Check that the safety chain has been released from the anchor.
6. Wait until you have reached the intended anchoring point before lowering the anchor.
7. Let out the anchor line equal to at least three times the depth of the water.

© 2025 Axopar Boats

8. Put the engine in astern to check that the anchor has taken hold (only when bow anchoring).
9. Note your position on the GPS. Regularly check that the boat has not moved from its position.
10. Set the echo sounder to “Anchor Watch”.

⚠ WARNING Always fix the anchor in such a way that it is securely fastened onto the boat. An anchor that falls off when under way may cause serious damage to the boat and mortal danger to the crew.

6.6.4 Towing and mooring

⚠ CAUTION When towing another boat or being towed, always drive slowly. If the boat you are towing is of the displacement hull type, never exceed its hull speed.

- Always attach the tow line so that it can be detached under load. It is the owner’s and users' responsibility to ensure that the mooring lines, towing lines, anchor chains, anchor lines and anchors are adequate for the vessel’s intended use.
- Always remember that the stability of the boat may decrease when being towed.

© 2025 Axopar Boats

7 Maintenance

7.1 Cleaning and maintaining the gelcoat surface

The gelcoat surface of the boat is subjected to environmental conditions which can, under certain circumstances, lead to deterioration of the surface. Overtime, these external factors such as saltwater, high UV exposure and temperature variation, can have an effect on the gelcoat surface.

Generally, gelcoat should last 3 years without showing any significant signs of yellowing, chalking, or other deterioration in typical conditions.

NOTICE

Clean and maintain regularly all the gelcoat surfaces on the boat.

If the regular cleaning and maintenance is neglected, or if the boat is exposed to certain environmental conditions where it is berthed, deterioration of the surface finish such as fading, discoloration and brittles may become visible over time.

- Wash and clean the boat after every trip, and weekly if it is stored outside uncovered.
- Wax the boat twice a year if used all year, otherwise annually.
- Inspect the gelcoat surface annually for signs of deterioration, such as brittle surfaces or changed color tones.
- Small scratches or discolorations can be fixed by buffing or polishing.
- Severe scratches, discoloration or oxidation may require wet sanding before buffing, polishing and vaxing.

  Wet sanding is recommended to be performed by your Axopar dealer or a trained professional.
- When the boat is not in use, keep the gelcoat surface out of the sun or cover the boat with a canvas tarpaulin.

  Do not use plastic or other non-porous materials, which can trap moisture between the cover and the surface.

Washing

NOTICE

Use a cleaning product specially made for boats. Do not use household cleaning products, chlorine, acids or similar as they may damage the boat surface due to their improper pH value.

Wash the boat after every trip by using a mild cleaning product. Dilute the cleaning product with fresh water according to the instructions on the product label.

1. Rinse the deck and hull with fresh water to remove loose dirt.
2. Wash the surfaces with the diluted cleaning product and a soft-bristled brush.
3. Rinse off with fresh water.

Waxing

Waxing the gelcoat surface restores gloss and protects the finish. Only use wax recommended for gelcoat, and follow the product instructions carefully.

© 2025 Axopar Boats

Wax can either be applied by hand using a clean rag, or with an orbital-motion buffing machine.

NOTICE If using a buffing machine, do not exceed the speed of 1200 rpm. Using a higher speed may burn the gelcoat.

NOTICE Do not wax a gelcoat surface in direct sunlight.

1. Apply wax and wait for a few minutes until the wax looks dry.
2. Buff the wax either by hand using a clean rag, or by using a buffing machine.

   Buff in circular motions until the surface is clean and glossy.
3. Finish by wiping the potential wax residues off with a clean rag.

Polishing and buffing

Small scratches or discolorations can be fixed by polishing and buffing the boat. If the surface has severe discoloration or oxidation, wet sanding is recommended before polishing and buffing.

- Polishing compounds remove small scratches and discolorations.
- Buffing compounds contain abrasive and remove deeper scratches or oxidation.

  Buffing compounds can be used, for example, to remove scratches on the hull caused by the fenders.
- After using the buffing compound, use polishing compound to achieve the best possible finish.
- Follow the product instructions of the compound carefully.

Polishing and buffing compounds can either be applied by hand using a clean rag, or with an orbital-motion buffing machine with a polishing pad.

NOTICE When using a buffing machine, do not exceed the speed of 1200 rpm. Using a higher speed may burn the gelcoat.

NOTICE Do not polish or buff a gelcoat surface in direct sunlight.

1. Apply polishing or buffing compound on the surface and wait for a few minutes until the compound looks dry.
2. Polish or buff the compound either by hand using a clean rag, or by using a buffing machine with a polishing pad.

   Buff in circular motions until the surface is glossy.
3. Wax the surface.

Wet sanding

NOTICE Wet sanding is recommended to be performed by your Axopar dealer or a trained professional.

© 2025 Axopar Boats

Severe scratches, discoloration or oxidation of the gelcoat surface may require wet sanding. Wet sanding can be done either by hand or by using a machine.

NOTICE When using a machine, do not exceed the speed of 1200 rpm.

Using a higher speed may burn the gelcoat.

NOTICE Do not wet sand a gelcoat surface in direct sunlight.

1. Spray water to the area that needs to be sanded.

   NOTICE Keep the surface continuously moist while sanding.

2. Sand the surface with a 1000 grit sandpaper (for example Mirka Abralon).

   If you use a machine, use a low rpm speed to get the best result.

   Keep sanding until the entire surface is equally matt.
3. Sand the surface with a finer 1400 grit sandpaper.
4. Sand the surface once more with an even finer-grit sandpaper.

   This saves time in the buffing and polishing stage.
5. After sanding, when the surface looks equally matt, rinse the surface with fresh water and allow to dry.
6. Buff and polish the surface to get the gloss back.
7. Wax the surface.

7.2 Antifouling

Painting your boat's hull with antifouling paint is worth considering if your boat is most of the season in water.

Boats that are frequently lifted out of the water and relaunched during the boating season can be affected by antifouling oxidization. Out-of-the water, antifouling paint will oxidize, which will prevent the biocide release and slowly cause antifouling to lose its effectiveness. Follow the paint manufacturer's specifications for launching window.

Antifouling wears gradually over time, depending on factors such as the location where the boat is used and how often the boat is used. As a rule of thumb, antifouling lasts one season once applied. When the antifouling needs to be repainted, it is important to use the same antifouling paint as the existing antifoul, or to scrub off old antifouling paint down to gel coat. If different antifouling paints are used, there is a risk that the composition of the paints are incompatible, preventing the antifouling paint from working.

Contact your nearest Axopar dealer in antifouling repainting and condition inspection related matters.

© 2025 Axopar Boats

7.3 Maintaining the interiors

7.3.1 Plastic and painted surfaces

1. Wet the surface evenly with water before the actual cleaning.
2. Remove stains.
   - Remove regular stains with a brush and a lightly diluted cleaner.
   - Remove grease with a brush or a sponge and window cleaner.
3. Clean the surface afterwards with sponge and water.
4. Wipe dry with a piece of cloth.

7.3.2 Doors and hatches

- Clean the tracks of sliding doors and hatches regularly and lubricate, if necessary.
- Lubricate handles and locks with regular lock lubricant.

7.4 Maintaining the cover

New covers may leak initially, as the seams need to swell.

During use

To prevent quick deterioration of the cover, secure it tightly in a folded-up position to prevent flapping.

After use

NOTICE

- Hang to dry. Never use a drying cabinet or iron to speed up drying.
- Check that the cover is completely dry before stowing. Stowing a moist cover can cause mold damage.
- Store the cover in dry indoor conditions for the winter.
- The cover must not be stored in the boat.

7.4.1 Cleaning the cover

The cover needs to be thoroughly cleaned two or three times a year.

NOTICE Never use high pressure washers or chemical cleaning agents.

© 2025 Axopar Boats

1. Let the fabric cover soak for at least 24 hours.
2. After soaking, wash the inside and outside of the cover with a sponge or a soft brush.

   Use mild soapy water and plenty of water, max. 30°C.
3. Rinse thoroughly with freshwater.

   Mix 12% vinegar in the final rinsing water to neutralize the soap residues.
4. Hang the cover to drip dry.

7.5 Protecting underwater metal parts

Boat's underwater metal components, such as thru-hulls, seacocks, trim tabs, engine internal components and propellers, are subject to electrolytic corrosion. Electrolysis and galvanic corrosion (corrosion of dissimilar metals in salt water) can occur in marine environment due to external factors such as stray currents, polluted waters, or proximity of other vessels. It is important for boat owner to be aware of the phenomena, as they can cause serious deterioration over time.

Signs of electrolytic corrosion are, for example, white, powdery substance on exposed metal such as propellers or breakers, or thru-hulls and seacocks turning greenish. If the corrosion has progressed far, even deep pitting can appear on the part’s surface.

The boats are equipped with sacrificial anodes to protect the metal parts from galvanic corrosion. Additionally, boats equipped with shore power have galvanic isolators to stop low voltage currents from flowing through the boat.

All underwater metal parts need to be inspected annually for signs of corrosion. Additionally, underwater thru-hulls and seacocks are recommended to be replaced every 5 years. Please refer to chapter ***Preventing corrosion*** for more details.

7.6 Preventing corrosion

Sacrificial anodes are installed on the boat’s trim tabs and engines to protect metallic parts from corrosion damage. The anodes need to be replaced regularly as they wear out to protect other metallic parts.

- Inspect the anodes monthly.
- Replace them when approximately fifty percent of the anode has deteriorated.

In general, anodes need replacement once a year in fresh water, and more frequently in saltwater environment. If there is an increase in the consumption speed, it can be a sign of electrical issue and the root cause should be investigated.

7.7 Preventing frost damage

- The bilge pump system is fitted with a water lock on the hose.
  - Detach the hose and fully drain the water from the water lock and run the pumps dry. Otherwise the pumps may freeze and break.
- Unscrew the frost plug on the underside of the shower fittings.
  - If there is no frost plug, unscrew the shower hose.
- Drain the water tank and all other components containing water in order to avoid frost damage.

© 2025 Axopar Boats

- Run the freshwater pump dry to drain out all the water.
- Make sure that no water remains in the boat under any circumstances. Leave the hatches in the cabin partially open.

7.8 Checklist: Before winter lay-up

- Wash the hull and bottom immediately after lifting the vessel out of the water.
- Wash all parts inside, also under the floorboards.
- Leave all lockers, drawers, and cabin and wardrobe doors open.
- Remove the carpets.
  - Store the carpets and cushions indoors in a dry place.
  - If this is not possible, make sure that the cushions are dry and position them on their side.
- Disconnect and service the fridge.
  - Switch off the power and disconnect the power supply.
  - Defrost the fridge.
  - Clean and dry the exterior and the interior of the fridge.
  - Empty and dry the condensate water tray.
  - Leave the door slightly ajar to enable ventilation.
  - Check the more detailed instruction in the manufacturer's manual.
- Ensure good ventilation in the boat.
- Make sure that the rubber O-ring between the fuel tank inlet and the fuel tank cap is intact. Otherwise there is risk of water getting inside the fuel tank.

NOTICE If the batteries are left aboard, make sure they are fully charged, otherwise the batteries can freeze and crack.

7.9 Checklist: Before launching

1. Remove the tarpaulin in good time before launching.
2. Wash the hull with a regular shampoo and a soft brush.
3. Wax the hull, if necessary.

   Use a standard boat wax.
4. If there are small scratches on the hull or if some of the surface gelcoat has lost its shine, use a rubbing compound on these areas before polishing.
5. Paint the bottom with antifouling paint.
6. If the batteries have been removed, put them back and check the electrolyte level in the cells.

   Check the condition of the batteries.
7. Check all cables, clamps, engine mountings and other fastenings.
8. Check the steering before launching.

© 2025 Axopar Boats

9. Check the instrumentation.
10. Close all water drain plugs.
11. Check that the seacocks are tight and in order, check for any frost damage.
12. Check all pipes, hoses and cocks.
13. Make a note of any frost damage.

7.10 Maintenance log

Regular maintenance tasks are presented in the following table. If you feel confident enough, you can perform all these tasks yourself. If not, please contact your local Axopar dealer for help.

Depending on vessel model and components, every task might not be relevant.

© 2025 Axopar Boats

MAINTENANCE LOG	Frequency				
Task to be performed	Every trip	Every month	Every 3 months	Every 6 months	Annually
Bilge system Remove, clean and inspect bilge pump, check valve and its surroundings for damage or debris that may reduce the performance of the pump	●				
Waste system - Replace the no-smell carbon filters					●
Waste system - Run the macerator pump					●
Heating system - Run the heater for 10 minutes		●			
Air conditioning system - Clean air filter, seawater strainer and check the system for leaks		●			
Water system - Clean inline filter			●		
Inspect Zinc anodes Replace all zinc anodes if 50 % has been eaten up				●	
Fire extinguisher inspection					●
CO alarm - Push test button for 1 sec			●		
Smoke alarm - Push test button for 3 sec			●		
Seacocks - Turn handle Open and Close					●
Batteries - Charge state, terminals securely attached and free from corrosion					●
LPG system - Check condition of LPG lines, connectors and LPG shut off valve					●
Fuel system - Check condition of fuel lines, connectors and fuel shutoff valves			●		
Inspect fuel tank compartment bilge for water				●	
Livewell pump - Check condition of hoses and connectors			●		
Gelcoat waxing				●	
Clean hull & deck from saltwater	●				
Keep bilge dry and clean	●				
Boat covers - Clean upholstery covers and sunroof cover				●	

© 2025 Axopar Boats

7.11 Corrective maintenance

7.11.1 Deposits

Mild detergents and fine rubbing compounds reduce the weathering and calcium deposits accumulated on the surfaces.

NOTICE Do not apply the rubbing compound in direct sunlight.

- Use only a fine grit compound, and follow the label instructions carefully.
- For the best result, wax the surface after treating it with the rubbing compound.

7.11.2 Scratches and nicks

Most scratches and nicks can be removed by using a rubbing compound followed by waxing.

7.11.3 Stains

Most stains can be removed by washing with a mild detergent.

- For stubborn stains, use a tine abrasive household cleanser followed by waxing to restore original luster.
- For non-water-soluble stains, such as grease, oil, and rubber heel marks, use a solvent such as acetone, rubbing alcohol, toluene or xylene, followed by a mild detergent.
    - If these solvents are not effective, try a rubbing compound or fine sanding followed by waxing.

7.11.4 Deep marks, gouges and holes

Deep marks, gouges and holes should be repaired professionally.

Gelcoats can be well repaired by professionals, and in most cases the repair will be undetectable.

NOTICE In cases where the damage has pierced the gelcoat layer, further exposure to water or chemicals should be avoided.

Failure to observe this precaution may result in extensive and potentially costly damage to the underlying laminate structure.

© 2025 Axopar Boats

8 Environment

When handling environmentally hazardous substances such as fuel, oils, solvents, grease, bottom coats, you need to consider the following:

- Always read the instructions for each product carefully and handle the product with care.
  - Make sure that the used packaging, cans and similar items are discarded in designated collection points.
  - If you are in any doubt whether the product is hazardous or not, contact the supplier or vendor of the product.
- The backwash from boats wears down the shoreline and creates problems for other boats near you.
  - Always adjust your speed to the situation and the surroundings to avoid unnecessary backwash.
- Always drive the boat at the most economical engine revs possible, taking the prevailing conditions into account, to avoid unnecessary emissions and noise.
- Make sure that the engine is properly serviced at regular intervals so that noise and emission levels are minimized.
  - Read the engine manufacturer's manual carefully.
- As a boat owner you must be aware of the local environmental laws, and respect codes of good practice.
  - Never empty the septic or blackwater tank into water.
  - Familiarize yourself with the international regulations on the prevention of marine pollution (MARPOL) and comply with these regulations.
- Always investigate the source of any oil leaks as soon as possible.
- Dispose of recovered spilt oil correctly.
- Keep oil-absorbing cloths or rolls on board.
- Never dispose of overboard any oil, paint or other chemical that is potentially harmful to the environment. Sanctions are in place in most parts of the world for those who disregard this rule!

⚠ WARNING Any oil must be treated as chemical waste.

8.1 Requirements for North America

The EPA standards state that in freshwater lakes, freshwater reservoirs or other freshwater impoundments whose inlets or outlets are such as to prevent the ingress or egress by vessel traffic subject to this regulation, or in rivers not capable of navigation by interstate vessel traffic subject to this regulation, marine sanitation devices certified by the U.S. Coast Guard installed on all vessels shall be designed and operated to prevent the overboard discharge of sewage, treated or untreated, or of any waste derived from sewage.

The EPA standards further state that this shall not be construed to prohibit the carriage of Coast Guard-certified flow-through treatment devices which have been secured so as to prevent such discharges. They also state that waters where a Coast Guard-certified marine sanitation device permitting discharge is allowed include coastal waters and estuaries, the Great Lakes and interconnected waterways,

© 2025 Axopar Boats

freshwater lakes and impoundments accessible through locks, and other flowing waters that are navigable interstate by vessels subject to this regulation (40 CFR 140.3).

© 2025 Axopar Boats

9 Appendix I: Checklists

9.1 Checklist: Fire in the engine

- Stop the engine.
- Steer the boat up against the wind, if possible.
- Make sure all passengers have life jackets.
- If necessary:
  - Evacuate the passengers.
  - Call for sea rescue.
- Shut off fuel and main power switches.
- Extinguish the fire.
- Wait until fully certain that the fire has been extinguished before opening the engine cover.

  Carefully open the engine cover and be prepared to use the handheld fire extinguisher if necessary for post-fire extinguishing.
- Put out possible smoldering fires with water.

9.2 Checklist: After fire

- Open doors and windows for better ventilation.
- Inspect the boat and its equipment, and repair any damages.
- Contact local authorities, if needed.
- Make sure that the fire extinguishing equipment is refilled or replaced after use.

9.3 Checklist: After grounding

If the boat hits a rock, the damage may be easily visible or hidden.

- Make sure that everyone on board is wearing a life jacket.
- Check that everyone on board is up on the deck.
- If necessary, make an emergency call or use a distress signaling device.
- Immediately after a capsize, check the bilge for leaks. Even if the bilge pump is not rated for leaks, you may try to empty the boat using it.
- Stop the engines and lift them out of the water.
- Turn off all the main electrical switches.
- If you can detach the boat after a rock slide, check the condition of the engine.
- Inspect the boat for leaks.
- To avoid further damage to the engine, do not drive the boat if, for example, you notice an oil leak or the engine blade is damaged.

© 2025 Axopar Boats

- If the leak is small, the boat is detached and at least one of the engines is functioning, drive to the nearest shore to prevent the boat from sinking.
- If a life raft is available and required, prepare it for use.
- If you detect a leak, close all doors and hatches. Open doors and hatches may cause the boat to drown more quickly.
- Do not go inside of the boat if it has a leak.
- Call for towing assistance from local authorities or other agencies.
- A professional should inspect the boat after grounding. Even if there is no visible leak, the hull may be damaged and in need of repair.

⚠ WARNING A big leak may cause the boat to sink quickly. Do not go or stay in and wear a life jacket.

9.4 Checklist: Regular inspection before leaving harbor

Safety

Make sure that:

- All the people onboard have life jackets.
- The wind and wave conditions do not exceed the design category of the boat.
- The dead man's switch is switched to driver.
- There is a fire extinguisher (or several) onboard and their approval/inspection date has not expired.
- The needed ropes and anchor are onboard.

Draining and tightness

Check that:

- There is no water in the bilge.
- All the bilge pumps are functional.
- The bilge has no signs of fuel or oil leaks.
- The deck drain system is clean and the valves are open.
- All deck hatches are tightly closed.

Electrical and engine

Check that:

- All the fuses are intact.
- The main switches are switched on.
- The batteries have enough power.
- The engine works properly.
- The engine cooling water flows as expected.
- The fuel level is sufficient.

© 2025 Axopar Boats

⚠ WARNING The specified tank capacity is not necessarily fully available, depending on the trim and load on board. The tank must always be kept at least 20% full.

9.5 Checklist: After using the boat

Make sure that:

- The main switches are switched off.
- The septic tank discharge valve is closed.
- There is no water in the bilge.
- The bilge pumps are functional.
- The deck draining works properly and all the draining valves are open.
- All deck hatches, roof canvas and doors are tightly closed.

9.6 Checklist: Boat handling before leaving harbor

For safe navigation under all weather conditions, proper sound signaling equipment in compliance with regulations (COLREG, 1972) must be carried on board. Make sure that the sound signaling equipment on the boat is compliant with these regulations.

⚠ CAUTION According to national regulations in some countries, it is a legal requirement to wear a life vest at all times.

- Check that the boat and its equipment are in seaworthy condition.
- Always listen to long-term weather forecasts when planning longer trips.
- Always make sure there is enough fuel and freshwater in the tanks.
- Check that all items on board are properly stowed and adequately secured to manage rough sea and wind conditions.
- Make sure that the swim ladder is raised out of the water before moving off.
- Make sure that the steering is correctly positioned before starting.
- All persons on board must wear an appropriate life vest when on deck.

9.7 Checklist: Before anchoring

1. Check the chart to see if anchoring is permitted in the area.
2. Listen to the weather forecast for the area and take note of the expected wind conditions.
3. Switch on the echo sounder.
4. Study the seabed conditions and make sure that there is good holding ground.
5. Check that the safety chain has been released from the anchor.
6. Wait until you have reached the intended anchoring point before lowering the anchor.
7. Let out the anchor line equal to at least three times the depth of the water.

© 2025 Axopar Boats

8. Put the engine in astern to check that the anchor has taken hold (only when bow anchoring).
9. Note your position on the GPS. Regularly check that the boat has not moved from its position.
10. Set the echo sounder to “Anchor Watch”.

⚠ WARNING Always fix the anchor in such a way that it is securely fastened onto the boat. An anchor that falls off when under way may cause serious damage to the boat and mortal danger to the crew.

9.8 Checklist: Before winter lay-up

- Wash the hull and bottom immediately after lifting the vessel out of the water.
- Wash all parts inside, also under the floorboards.
- Leave all lockers, drawers, and cabin and wardrobe doors open.
- Remove the carpets.
  - Store the carpets and cushions indoors in a dry place.
  - If this is not possible, make sure that the cushions are dry and position them on their side.
- Disconnect and service the fridge.
  - Switch off the power and disconnect the power supply.
  - Defrost the fridge.
  - Clean and dry the exterior and the interior of the fridge.
  - Empty and dry the condensate water tray.
  - Leave the door slightly ajar to enable ventilation.
  - Check the more detailed instruction in the manufacturer's manual.
- Ensure good ventilation in the boat.
- Make sure that the rubber O-ring between the fuel tank inlet and the fuel tank cap is intact. Otherwise there is risk of water getting inside the fuel tank.

NOTICE If the batteries are left aboard, make sure they are fully charged, otherwise the batteries can freeze and crack.

9.9 Checklist: Before launching

1. Remove the tarpaulin in good time before launching.
2. Wash the hull with a regular shampoo and a soft brush.
3. Wax the hull, if necessary.

   Use a standard boat wax.
4. If there are small scratches on the hull or if some of the surface gelcoat has lost its shine, use a rubbing compound on these areas before polishing.
5. Paint the bottom with antifouling paint.

© 2025 Axopar Boats

6. If the batteries have been removed, put them back and check the electrolyte level in the cells.

   Check the condition of the batteries.
7. Check all cables, clamps, engine mountings and other fastenings.
8. Check the steering before launching.
9. Check the instrumentation.
10. Close all water drain plugs.
11. Check that the seacocks are tight and in order, check for any frost damage.
12. Check all pipes, hoses and cocks.
13. Make a note of any frost damage.

9.10 Maintenance log

Regular maintenance tasks are presented in the following table. If you feel confident enough, you can perform all these tasks yourself. If not, please contact your local Axopar dealer for help.

Depending on vessel model and components, every task might not be relevant.

© 2025 Axopar Boats

MAINTENANCE LOG	Frequency				
Task to be performed	Every trip	Every month	Every 3 months	Every 6 months	Annually
Bilge system Remove, clean and inspect bilge pump, check valve and its surroundings for damage or debris that may reduce the performance of the pump	●				
Waste system - Replace the no-smell carbon filters					●
Waste system - Run the macerator pump					●
Heating system - Run the heater for 10 minutes		●			
Air conditioning system - Clean air filter, seawater strainer and check the system for leaks		●			
Water system - Clean inline filter			●		
Inspect Zinc anodes Replace all zinc anodes if 50 % has been eaten up				●	
Fire extinguisher inspection					●
CO alarm - Push test button for 1 sec			●		
Smoke alarm - Push test button for 3 sec			●		
Seacocks - Turn handle Open and Close					●
Batteries - Charge state, terminals securely attached and free from corrosion					●
LPG system - Check condition of LPG lines, connectors and LPG shut off valve					●
Fuel system - Check condition of fuel lines, connectors and fuel shutoff valves			●		
Inspect fuel tank compartment bilge for water				●	
Livewell pump - Check condition of hoses and connectors			●		
Gelcoat waxing				●	
Clean hull & deck from saltwater	●				
Keep bilge dry and clean	●				
Boat covers - Clean upholstery covers and sunroof cover				●	

© 2025 Axopar Boats

10 Appendix II: Fuel system

© 2025 Axopar Boats

REVISIONS			
REV.	DESCRIPTION	DATE	APPROVED
A	Changed length for supply hose	11.3.2021.	
B	Gaskets changed	13.9.2021.	

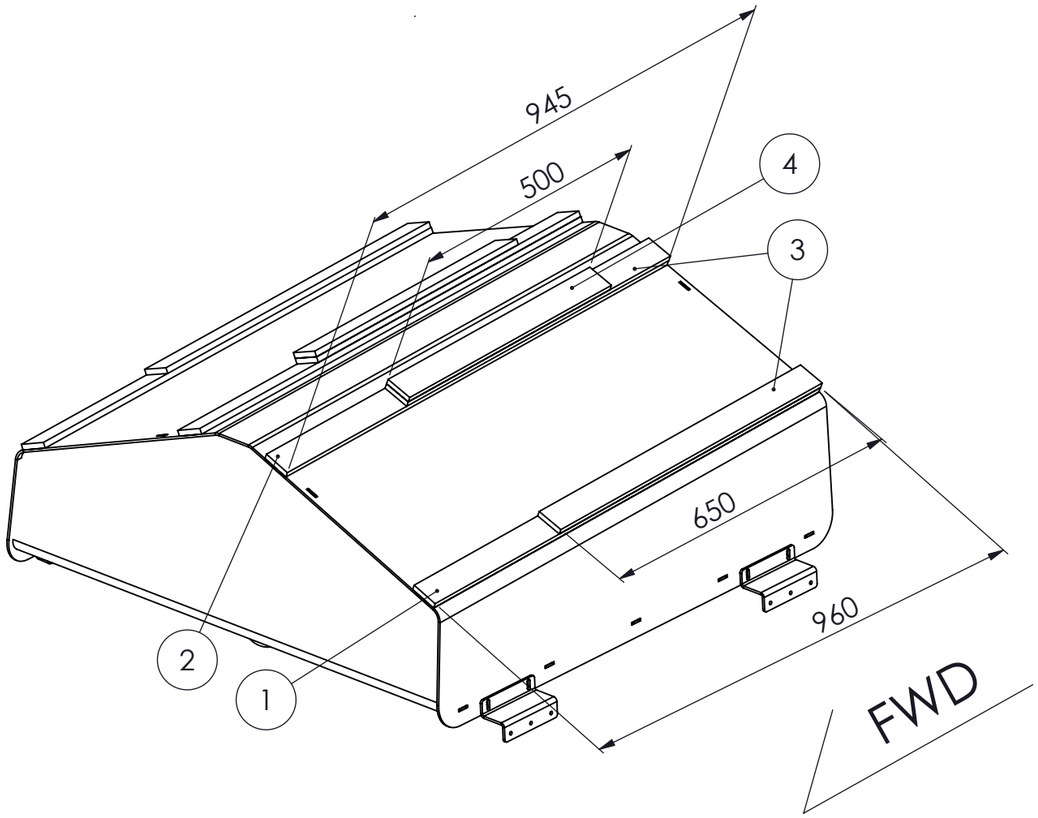

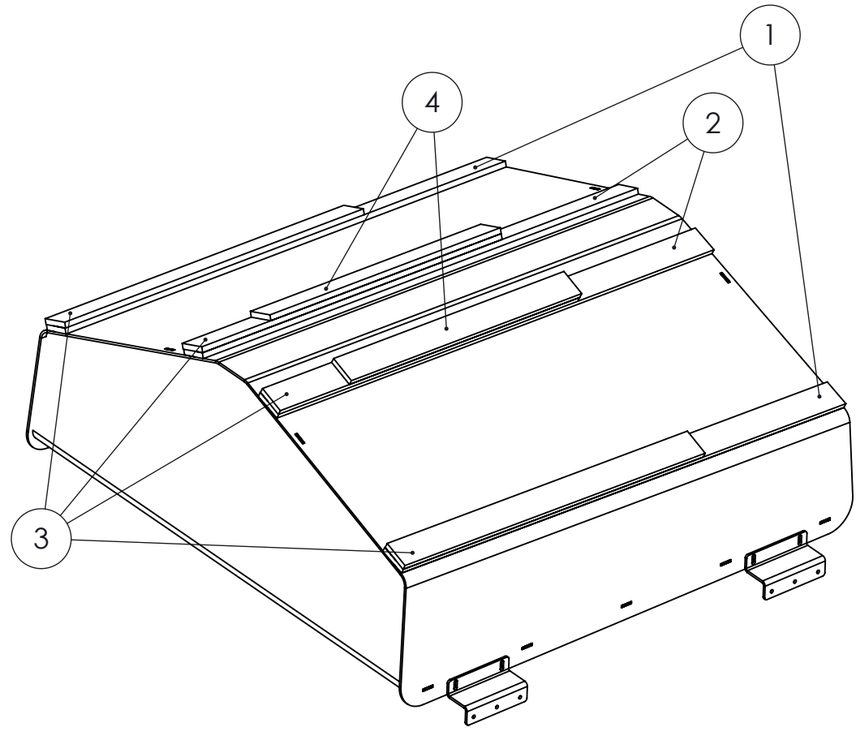

PART NO.	ITEM	DESCRIPTION	MATERIAL	SIZE, CAPACITY	QTY.
1	AXO3000305, A	GASKET	PLASTIC, PE	960 X 50 X 10, 60KG / M3	2
2	AXO3000305, A	GASKET	PLASTIC, PE	945 X 50 X 10, 60KG / M3	2
3	AXO3000305, A	GASKET	PLASTIC, PE	650 X 50 X 10, 60KG / M3	4
4	AXO3000305, A	GASKET	PLASTIC, PE	500 X 50 X 10, 60KG / M3	2

This document and the information contained in it is proprietary and confidential information of Axopar Boats Oy. Neither this document nor any of the information contained herein may be reproduced, disclosed to others, or used for any purpose other than for the purpose it has been provided without the prior written permission of Axopar Boats Oy.

AXOPAR

ITEM	REV
AXO9000040	C

BOAT MODEL	MODEL YEAR	DRAWING	REV
AX22	2021	DRW00020	B

	BY	DATE	DESCRIPTION	SCALE	PAGE
CREATED	PULSE2	22.12.2020.	Fuel system, EU version	1:10	1 / 2
CHECKED	L.C.	23.12.2020.	TECHNICAL DESCRIPTION		
ACCEPTED	RWE	23.12.2020.	Manufacturing specification		

PULSE YACHT DESIGN

REVISIONS			
REV.	DESCRIPTION	DATE	APPROVED
A	Changed length for supply hose	11.3.2021.	
B	Gaskets changed	13.9.2021.	

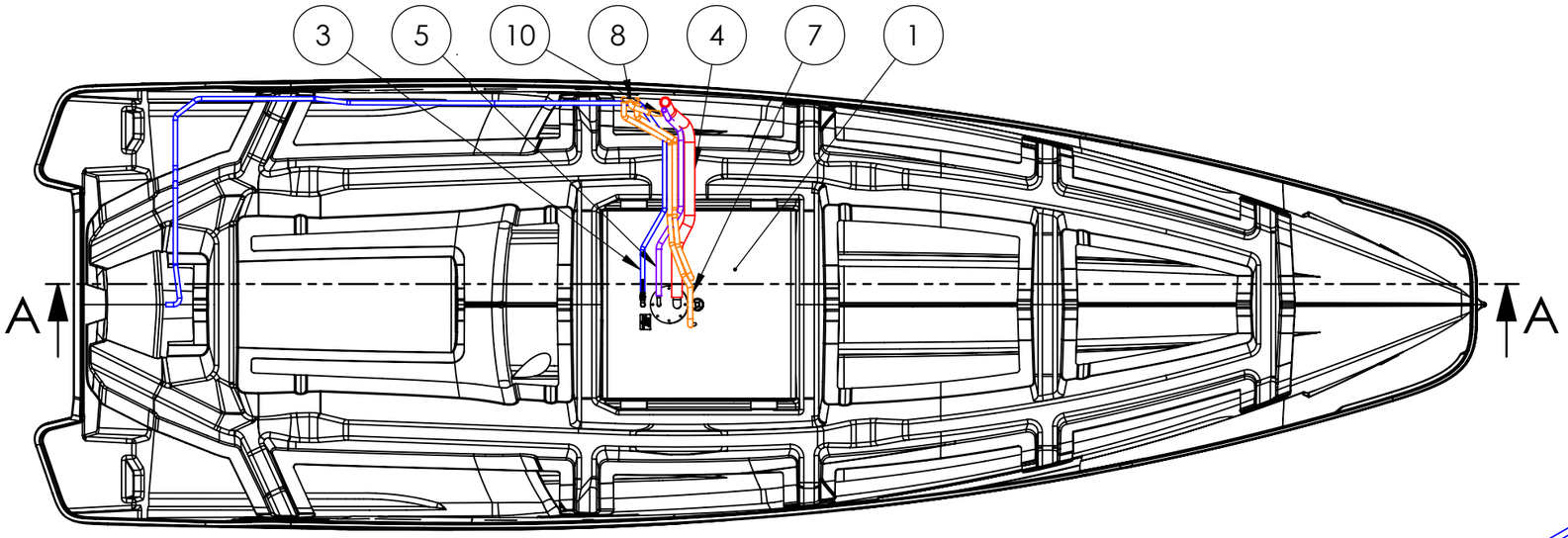

HULL-STRINGER TOP VIEW

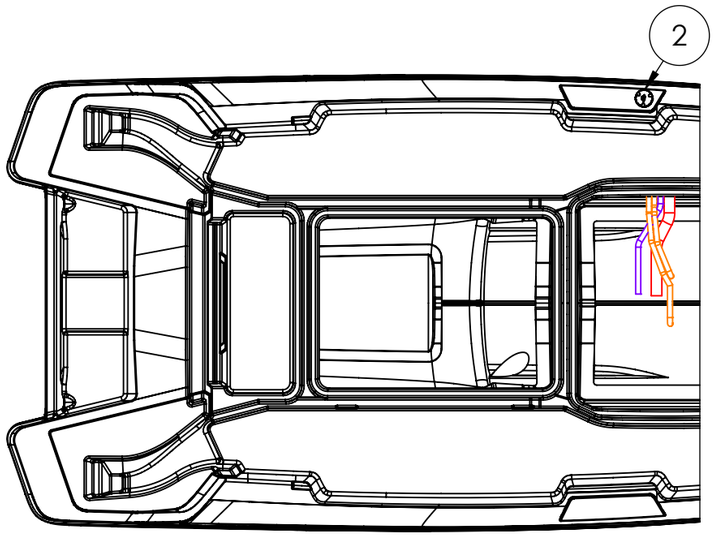

DECK TOP VIEW

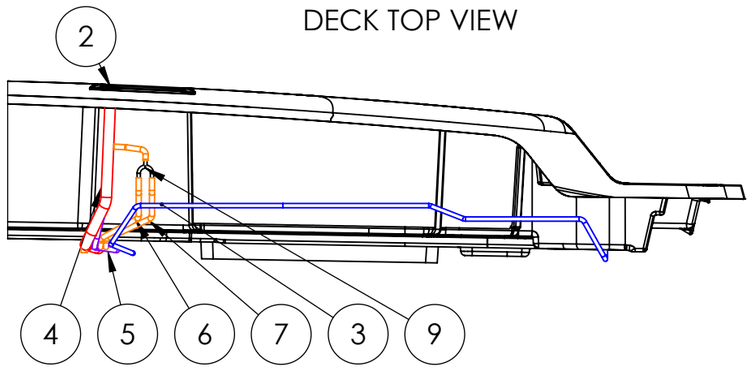

DECK PRE-MONTAGE:
Fuel hose supply route fixed onto the deck on the PS
Holes ∅10 inside PVC ∅25 conduit

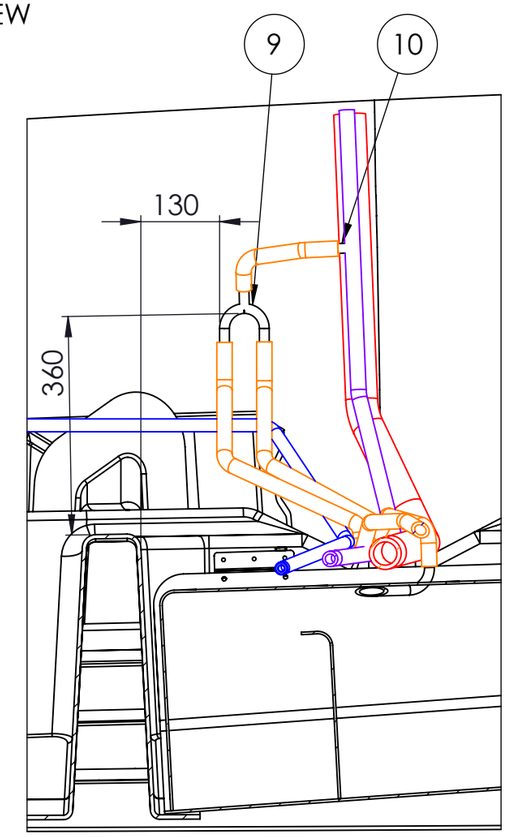

SECTION A-A
SCALE 1 : 10
Y and T Connector positions - on Hull
Vent bypass

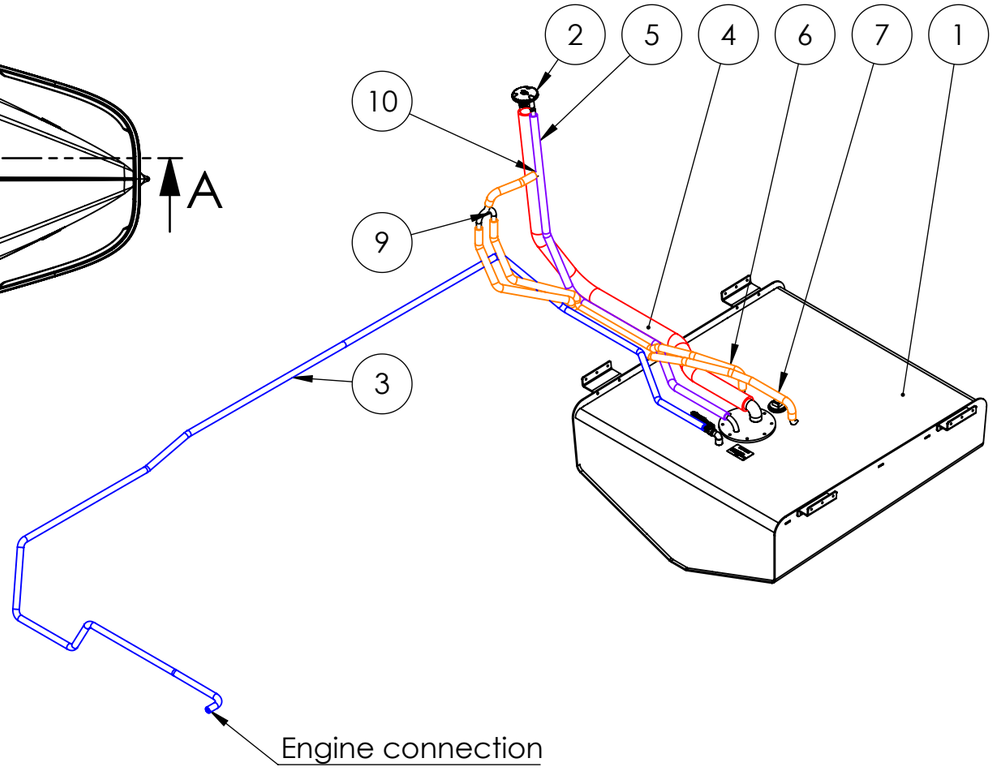

PART NO.	ITEM	DESCRIPTION	MATERIAL	SIZE, CAPACITY	LENGTH [m]	QTY.
1	AXO8000032, A	FUEL TANK	ALUMINIUM	238 L		1
2	AXO8000031, A	DECK FILLER (FUEL)	PLASTIC /CHROME	ø38, ø16		1
3	AXO8000043, A	FUEL HOSE (SUPPLY)	NBR RUBBER	ø10	4,5	1
4	AXO8000040, A	FUEL HOSE	NBR RUBBER	ø38	1,6	1
5	AXO8000041, A	FUEL HOSE	NBR RUBBER	ø16	1,6	1
6	AXO8000041, A	FUEL HOSE	NBR RUBBER	ø16	1,3	1
7	AXO8000041, A	FUEL HOSE	NBR RUBBER	ø16	1,5	1
8	AXO8000041, A	FUEL HOSE	NBR RUBBER	ø16	0,2	1
9	AXO8000086, A	T-CONNECTOR	ALUMINIUM	ø16		1
10	AXO8000090, A	T-CONNECTOR	PLASTIC, POM	ø16		1

This document and the information contained in it is proprietary and confidential information of Axopar Boats Oy. Neither this document nor any of the information contained herein may be reproduced, disclosed to others, or used for any purpose other than for the purpose it has been provided without the prior written permission of Axopar Boats Oy.

AXOPAR

ITEM	REV
AXO9000040	C

BOAT MODEL	MODEL YEAR	DRAWING	REV
AX22	2021	DRW00020	B

	BY	DATE	DESCRIPTION	SCALE	PAGE
CREATED	PULSE2	23.10.2020	Fuel system, EU version	1:30	2 / 2
CHECKED	L.C.	23.12.2020	TECHNICAL DESCRIPTION		
ACCEPTED	RWE	23.12.2020	Manufacturing specification		

PULSE YACHT DESIGN

REVISIONS			
REV.	DESCRIPTION	DATE	APPROVED
A	Changed length for supply hose	11.3.2021.	
B	Gaskets changed	13.9.2021.	

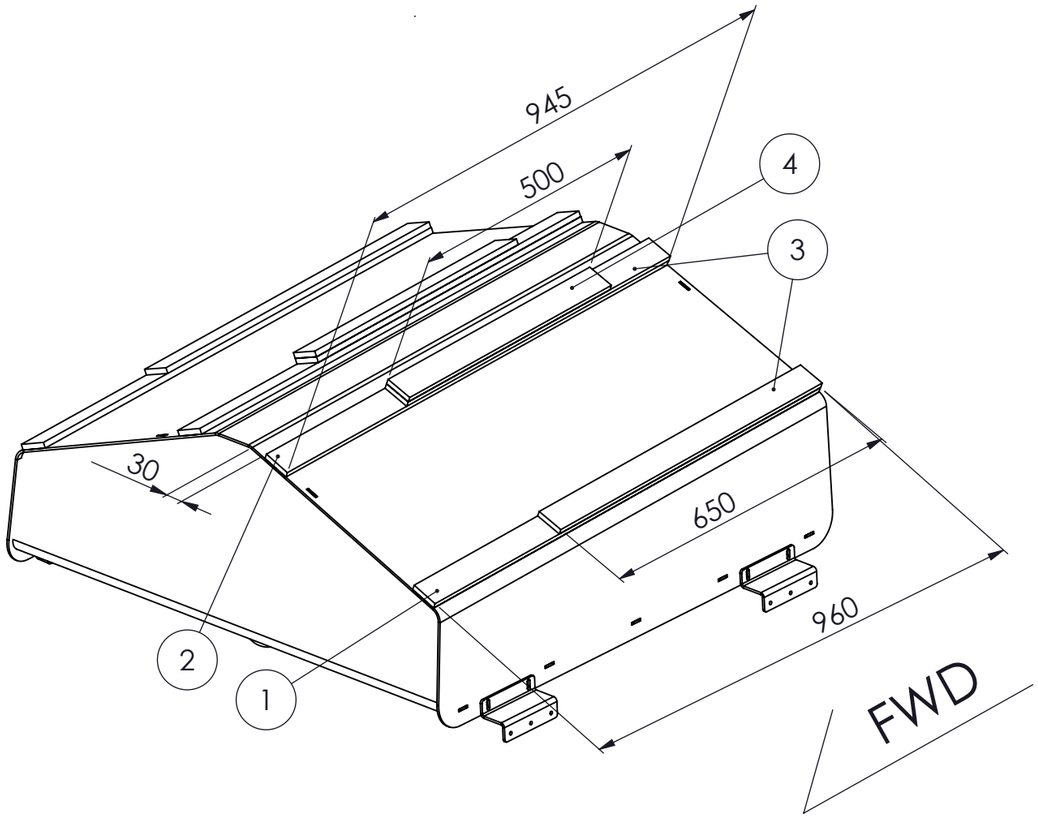

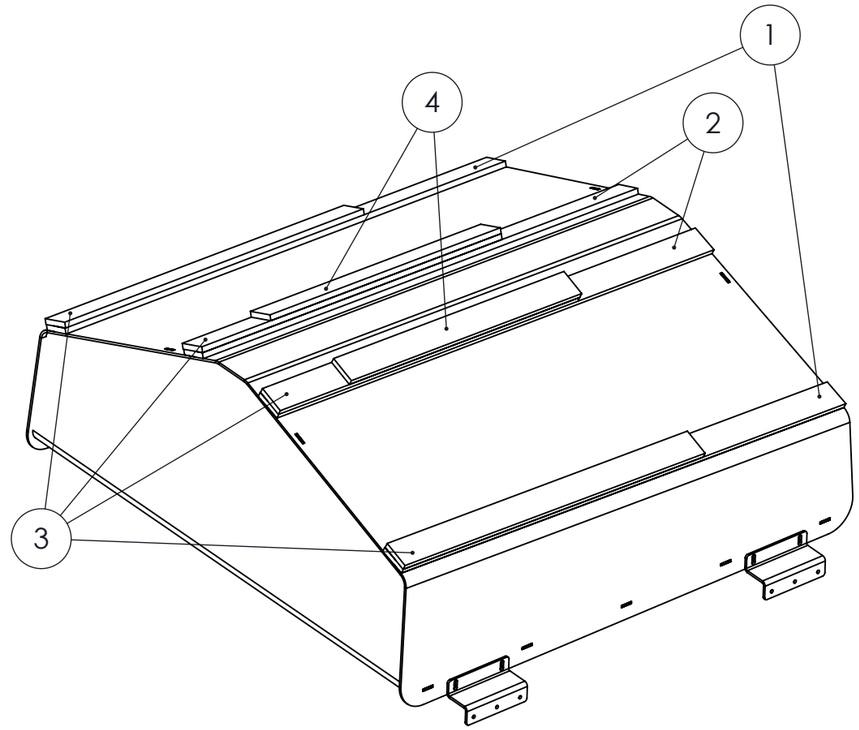

PART NO.	ITEM	DESCRIPTION	MATERIAL	SIZE, CAPACITY	QTY.
1	AXO3000305, A	GASKET	PLASTIC, PE	960 X 50 X 10, 60KG / M3	2
2	AXO3000305, A	GASKET	PLASTIC, PE	945 X 50 X 10, 60KG / M3	2
3	AXO3000305, A	GASKET	PLASTIC, PE	650 X 50 X 10, 60KG / M3	4
4	AXO3000305, A	GASKET	PLASTIC, PE	500 X 50 X 10, 60KG / M3	2

This document and the information contained in it is proprietary and confidential information of Axopar Boats Oy. Neither this document nor any of the information contained herein may be reproduced, disclosed to others, or used for any purpose other than for the purpose it has been provided without the prior written permission of Axopar Boats Oy.

AXOPAR

ITEM	REV
AXO9000041	D

BOAT MODEL	MODEL YEAR	DRAWING	REV
AX22	2021	DRW00072	B

	BY	DATE	DESCRIPTION	SCALE	PAGE
CREATED	PULSE2	22.12.2020.	Fuel system, US version	1:10	1 / 2
CHECKED	L.C.	23.12.2020.	TECHNICAL DESCRIPTION		
ACCEPTED	RWE	23.12.2020.	Manufacturing specification		

PULS YACHT DESIGN

REVISIONS			
REV.	DESCRIPTION	DATE	APPROVED
A	Changed length for supply hose	11.3.2021.	
B	Gaskets changed	13.9.2021.	

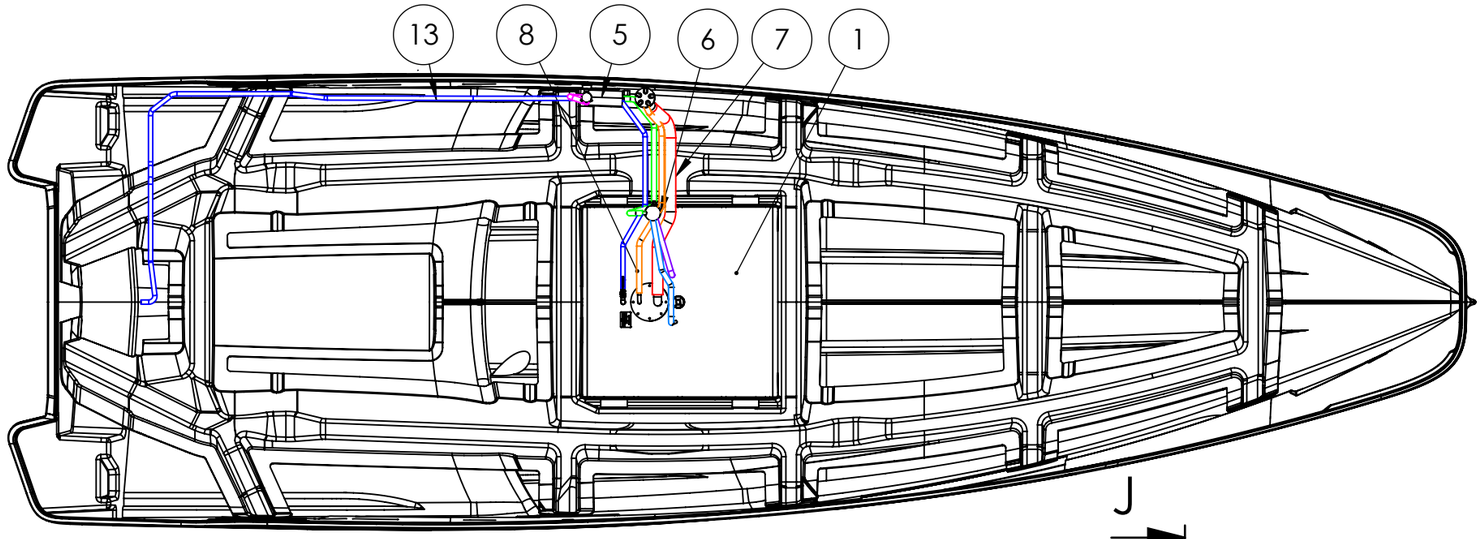

HULL-STRINGER TOP VIEW

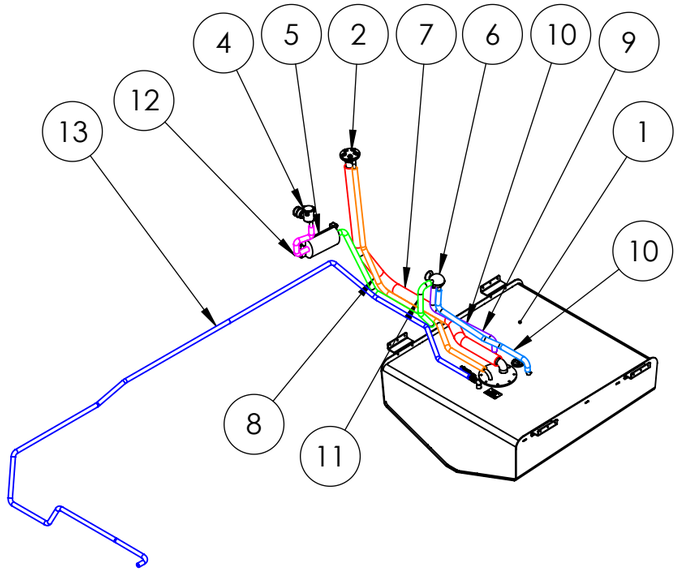

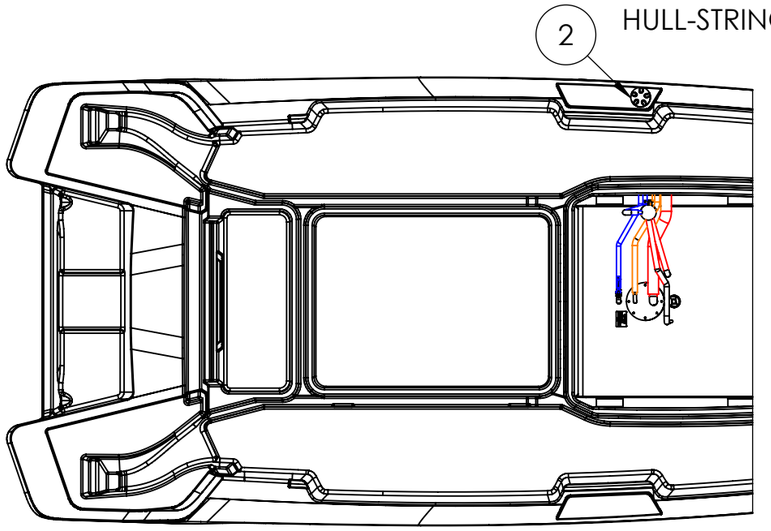

DECK TOP VIEW

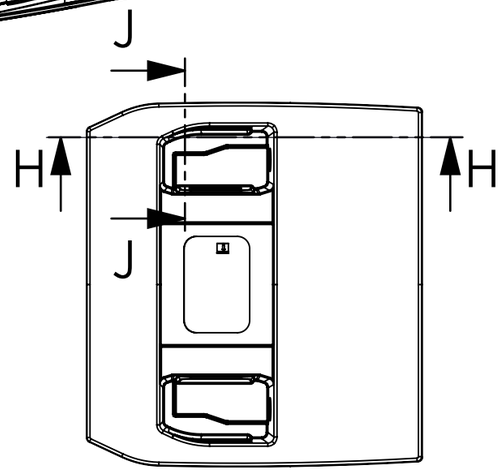

SEAT BASE -
AIR/FUEL SEPARATOR POSITION

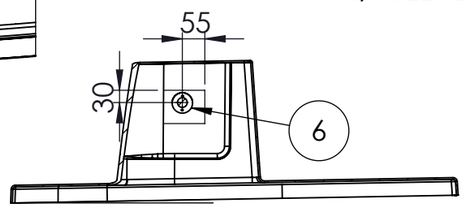

SECTION H-H
SCALE 1 : 15

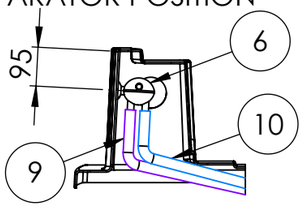

SECTION J-J
SCALE 1 : 15

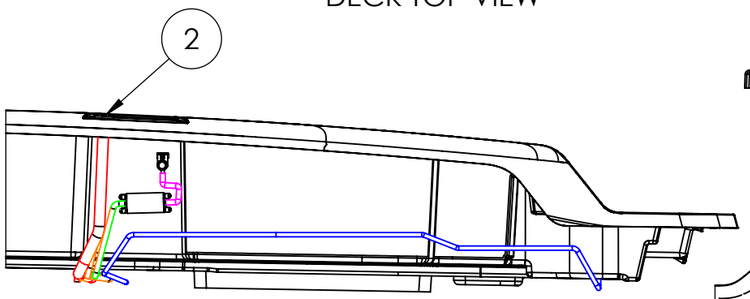

DECK PRE-MONTAGE:
Fuel hose supply route fixed onto the deck on the PS
Holes ⌀10 inside PVC ⌀25 conduit

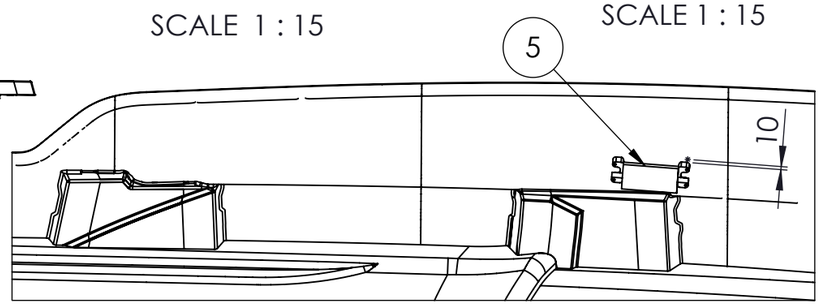

HULL PORT SIDE -
CARBON CANISTER POSITION

PART NO.	ITEM	DESCRIPTION	MATERIAL	SIZE, CAPACITY	LENGTH [m]	Default/QTY.
1	AXO8000032, A	FUEL TANK	ALUMINIUM	238 L		1
2	AXO8000085, A	DECK FILLER (FUEL)	POLYMER BODY, CHROME PLATED BRONZE CAP	ø38MM / ø16MM		1
3	AXO8000081, A	CHECK VALVE	PLASTIC	ø38MM, (1-1/2")		1
4	AXO8000082, A	TANK VENTILATOR		ø16MM, (5/8")		1
5	AXO8000083, A	CARBON CANISTER	PLASTIC	ø16MM/ ø16MM (5/8" - 5/8")		1
6	AXO8000084, A	AIR/FUEL SEPARATOR	PLASTIC, POLYMER	ø16MM, (5/8")		1
7	AXO8000040, A	FUEL HOSE	NBR RUBBER	ø38	1,58	1
8	AXO8000041, A	FUEL HOSE	NBR RUBBER	ø16	1,58	1
9	AXO8000041, A	FUEL HOSE	NBR RUBBER	ø16	0,53	1
10	AXO8000041, A	FUEL HOSE	NBR RUBBER	ø16	0,7	1
11	AXO8000041, A	FUEL HOSE	NBR RUBBER	ø16	1,22	1
12	AXO8000041, A	FUEL HOSE	NBR RUBBER	ø16	0,3	1
13	AXO8000043, A	FUEL HOSE	NBR RUBBER	ø10	4,5	1

This document and the information contained in it is proprietary and confidential information of Axopar Boats Oy. Neither this document nor any of the information contained herein may be reproduced, disclosed to others, or used for any purpose other than for the purpose it has been provided without the prior written permission of Axopar Boats Oy.

AXOPAR

ITEM	REV
AXO9000041	D

BOAT MODEL	MODEL YEAR	DRAWING	REV
AX22	2021	DRW00072	B

	BY	DATE	DESCRIPTION	SCALE	PAGE
CREATED	PULSE3	22.12.2020	Fuel system, US version	1:30	2 / 2
CHECKED	L.C.	23.12.2020	TECHNICAL DESCRIPTION		
ACCEPTED	RWE	23.12.2020	Manufacturing specification		

PULSE YACHT DESIGN

11 Appendix III: Electrical diagrams

© 2025 Axopar Boats

Axopar 22

ELECTRICAL DIAGRAM / PRODUCTION DRAWINGS

DOCUMENT INCLUDES:
BOAT HARNESS / PANEL GENERAL LAYOUT
ELECTRICAL STRUCTURE OF 12V DC SYSTEM (EURO/USA)
12V DC DIAGRAM
PRODUCTION DRAWINGS

NOTE! ALL CABLE AREAS ARE IN METRIC SYSTEM (mm2).

REVISION B8

Date of modification	Modified by	Description
02.09.2022	TT	B7: NOT MODIFIED
1.3.2024	PF	B8: 2005068; NOT MODIFIED
26.10.2021	VV	B6: NOT MODIFIED.

Date	11.5.2020
Drawing by	TuM
Sheet rev.	8
Project rev.	B

This document and all the information contained in it is proprietary and confidential information of Axopar Boats Oy. Neither this document nor any of the information contained herein may be reproduced, disclosed to others or used in any purpose other then for the prpose it has been provided without theprior writen permission of Axopar Boats Oy

Axopar			
Boat	Sub-product code	Product code	Project ID
22	COVER	HL	1/ 49
Boat model	Title	Loc	Sheet

LEGEND:
(APPLIES ONLY THIS PAGE)

-X.3 SOCKET CONNECTOR (INCLUDES PIN CONTACTS)

-X3 PLUG CONNECTOR (INCLUDES SOCKET CONTACTS)

OR — ALL PRODUCTS TIED "OR" -LABEL ARE ALTERNATIVE OPTIONS DEPENDING THE SET-UP OR MODEL OF BOAT. BOTH PRODUCTS WITH "OR" -LABEL CANNOT INSTALL TO BOAT.

NOTE! CONNECTOR NAME LIKE "X3" IS HEADER ONLY FOR EXAMPLE X3 CONNECTORS INCLUDES VARIOUS CONNECTORS:
X3a, X3b, X3c, X3d, X3e, X3f and X3g.
MORE DETAILS IN ELECTRIC SCHEMATIC AND PRODUCTION DRAWINGS.

HARNESS STRUCTURE

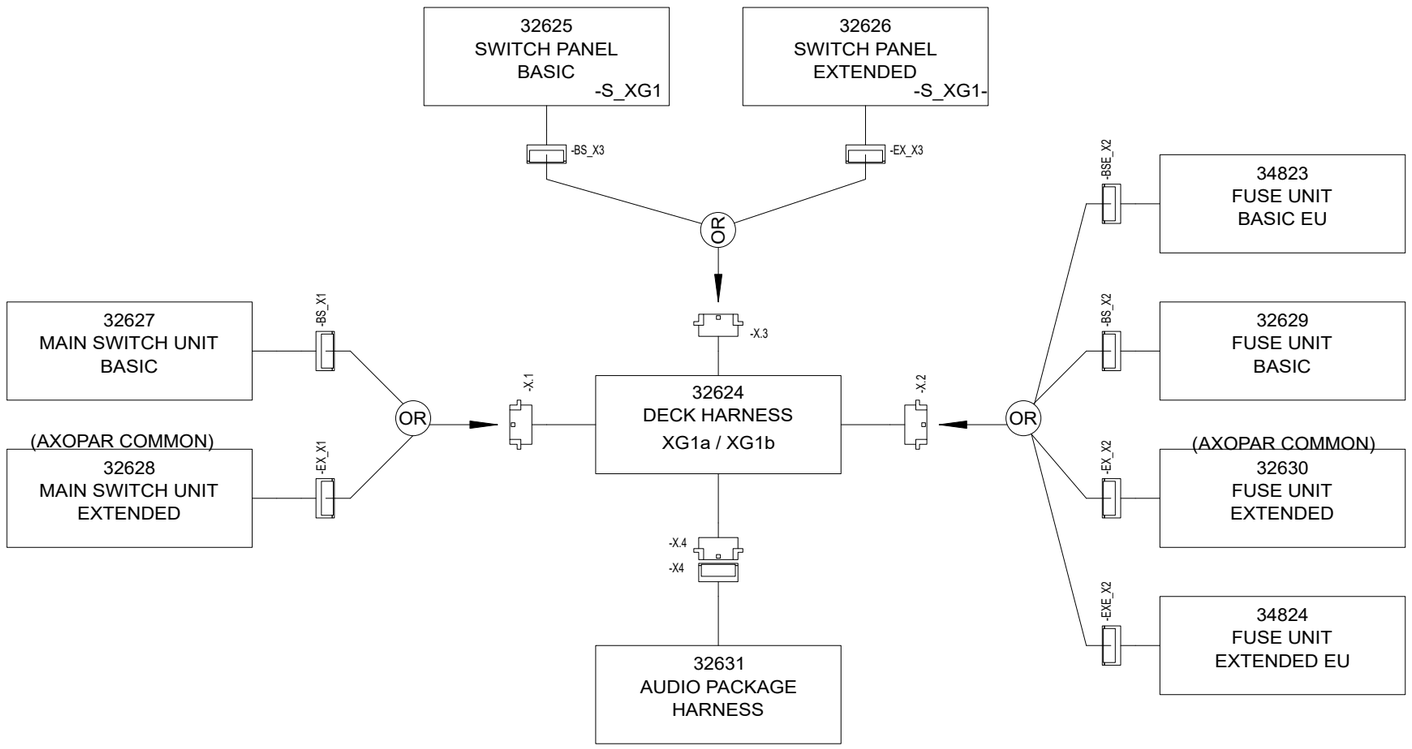

POWER CABLES STRUCTURE

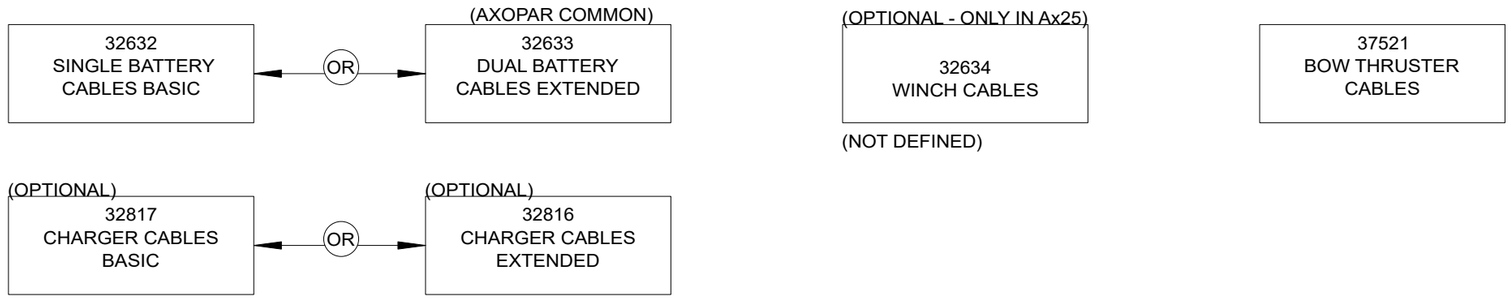

02.09.2022	TT	B7: NOT MODIFIED	Date	11.5.2020	This document and all the information contained in it is proprietary and confidential information of Axopar Boats Oy. Neither this document nor any of the information contained herein may be reproduced, disclosed to others or used in any purpose other then for the prpose it has been provided without theprior writen permission of Axopar Boats Oy	Axopar			
1.3.2024	PF	B8: 2005068; NOT MODIFIED	Drawing by	TuM		Boat	Sub-product code	Product code	Project ID
26.10.2021	VV	B6: NOT MODIFIED.	Sheet rev.	8		22	12Vdc STRUCTURE	HL	2 / 49
Date of modification	Modified by	Description	Project rev.	B		Boat model	Title	Loc	Sheet

LONG CONSOLE HARNESS/ PANEL GENERAL LAYOUT

TOP VIEW

NOTE!
LAYOUT GIVES ONLY APPROXIMATE LOCATION OF PANEL AND HARNESS.

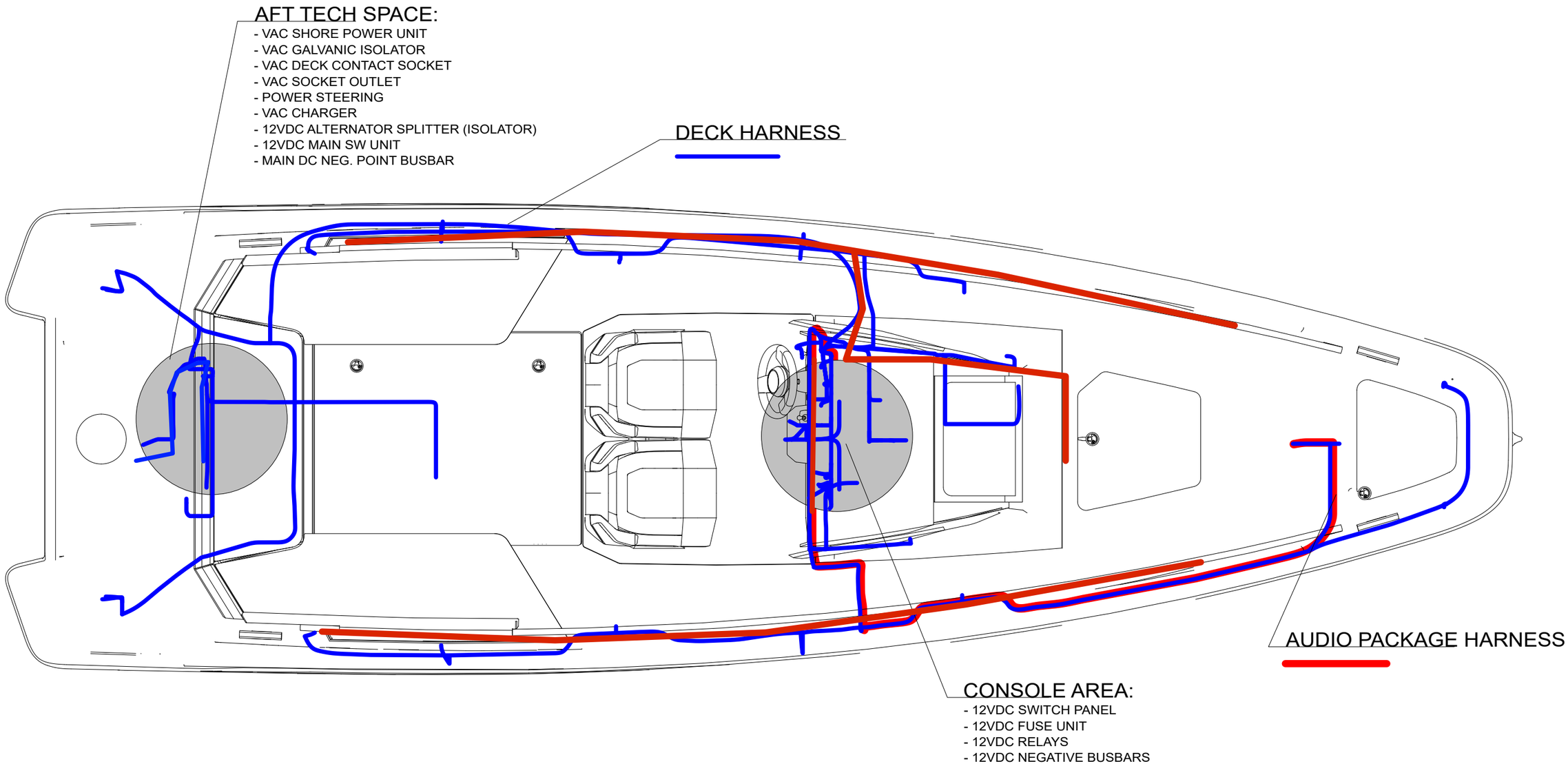

Date of modification	Modified by	Description
02.09.2022	TT	B7: NOT MODIFIED
1.3.2024	PF	B8: 2005068; NOT MODIFIED
26.10.2021	VV	B6: NOT MODIFIED.

Date	18.5.2020
Drawing by	TuM
Sheet rev.	8
Project rev.	B

This document and all the information contained in it is proprietary and confidential information of Axopar Boats Oy. Neither this document nor any of the information contained herein may be reproduced, disclosed to others or used in any purpose other then for the prpose it has been provided without theprior writen permission of Axopar Boats Oy

AXOPAR BRABUS MARINE

Boat	Sub-product code	Product code	Project ID
Axopar			

Boat model	Title	Loc	Sheet
22	HARNESS LAYOUT (WITH LONG CONSOLE)	HL	3 / 49

LONG CONSOLE HARNESS/ PANEL GENERAL LAYOUT

SIDE VIEW

NOTE!
LAYOUT GIVES ONLY APPROXIMATE LOCATION OF PANEL AND HARNESS.

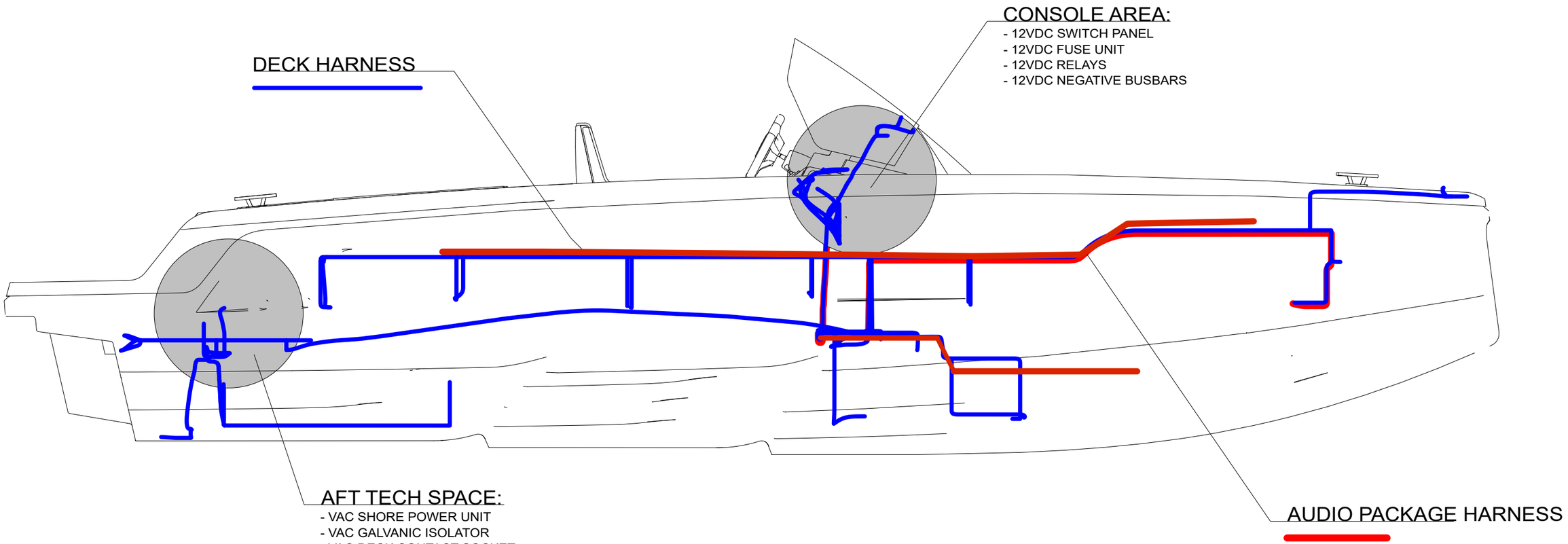

02.09.2022	TT	B7: NOT MODIFIED	Date	11.5.2020	This document and all the information contained in it is proprietary and confidential information of Axopar Boats Oy. Neither this document nor any of the information contained herein may be reproduced, disclosed to others or used in any purpose other then for the prpose it has been provided without theprior writen permission of Axopar Boats Oy	Axopar		
1.3.2024	PF	B8: 2005068; NOT MODIFIED	Drawing by	TuM		Boat	Sub-product code	Product code	Project ID
26.10.2021	VV	B6: NOT MODIFIED.	Sheet rev.	8	AXOPAR / BRABUS MARINE	22	HARNESS LAYOUT (WITH LONG CONSOLE)	HL	4 / 49
Date of modification	Modified by	Description	Project rev.	B		Boat model	Title	Loc	Sheet

DECK HARNESS - LAYOUT

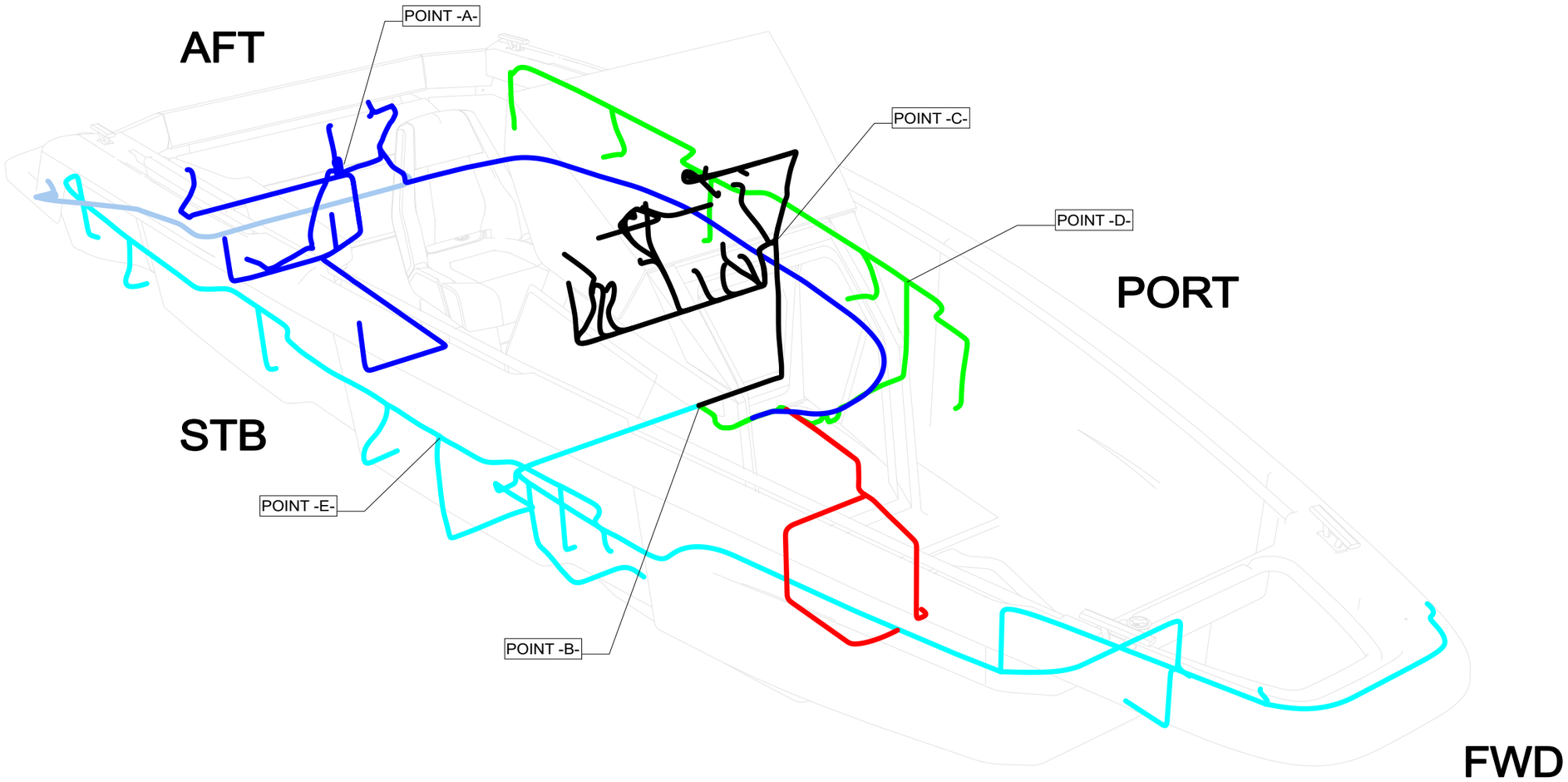

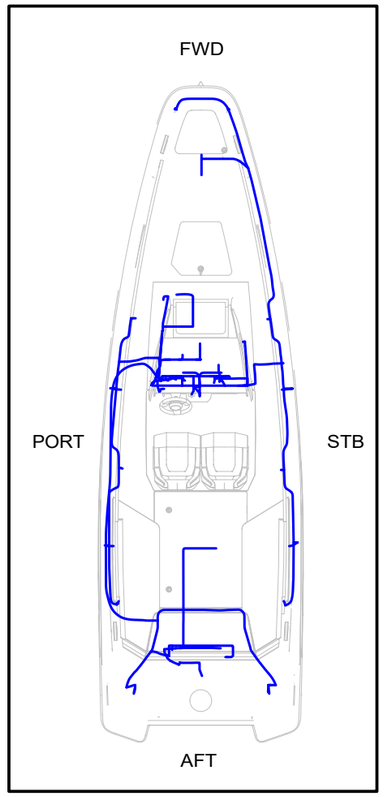

(0,015)

02.09.2022	TT	B7: NOT MODIFIED	Date	9.7.2020	This document and all the information contained in it is proprietary and confidential information of Axopar Boats Oy. Neither this document nor any of the information contained herein may be reproduced, disclosed to others or used in any purpose other then for the prpose it has been provided without theprior writen permission of Axopar Boats Oy	Axopar			
1.3.2024	PF	B8: 2005068; NOT MODIFIED	Drawing by	TuM		Boat	Sub-product code	Product code	Project ID
26.10.2021	VV	B6: NOT MODIFIED.	Sheet rev.	8	AXOPAR / BRABUS MARINE	22	DECK HARNESS - LAYOUT	HL	5 / 49
Date of modification	Modified by	Description	Project rev.	B		Boat model	Title	Loc	Sheet

AUDIO HARNESS - LAYOUT

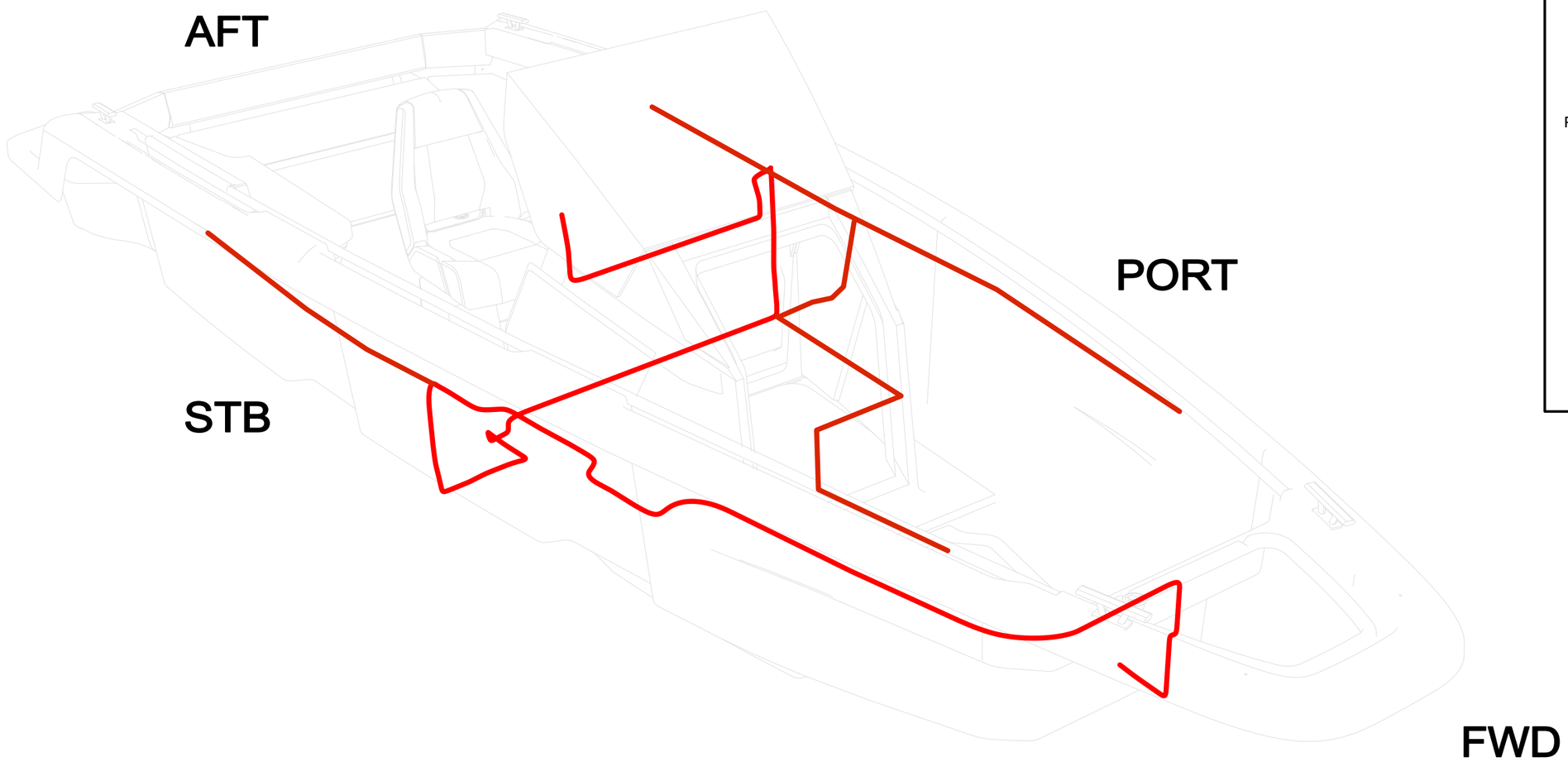

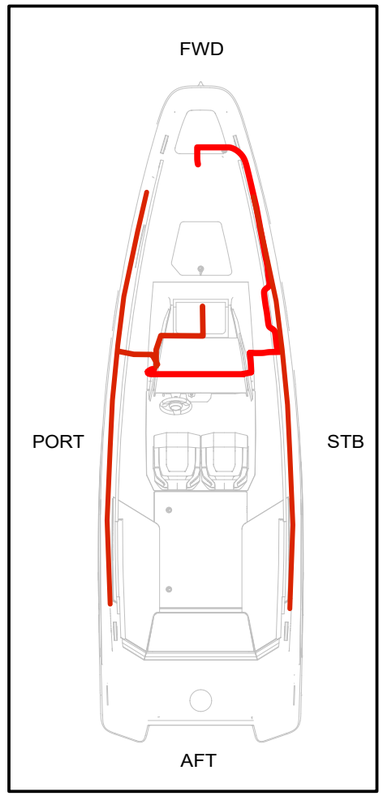

(0,015)

02.09.2022	TT	B7: NOT MODIFIED	Date	9.7.2020	This document and all the information contained in it is proprietary and confidential information of Axopar Boats Oy. Neither this document nor any of the information contained herein may be reproduced, disclosed to others or used in any purpose other then for the prpose it has been provided without theprior writen permission of Axopar Boats Oy	Axopar			
1.3.2024	PF	B8: 2005068; NOT MODIFIED	Drawing by	TuM		Boat	Sub-product code	Product code	Project ID
26.10.2021	VV	B6: NOT MODIFIED.	Sheet rev.	8	AXOPAR / BRABUS MARINE	22	AUDIO HARNESS - LAYOUT	HL	6 / 49
Date of modification	Modified by	Description	Project rev.	B		Boat model	Title	Loc	Sheet

12VDC

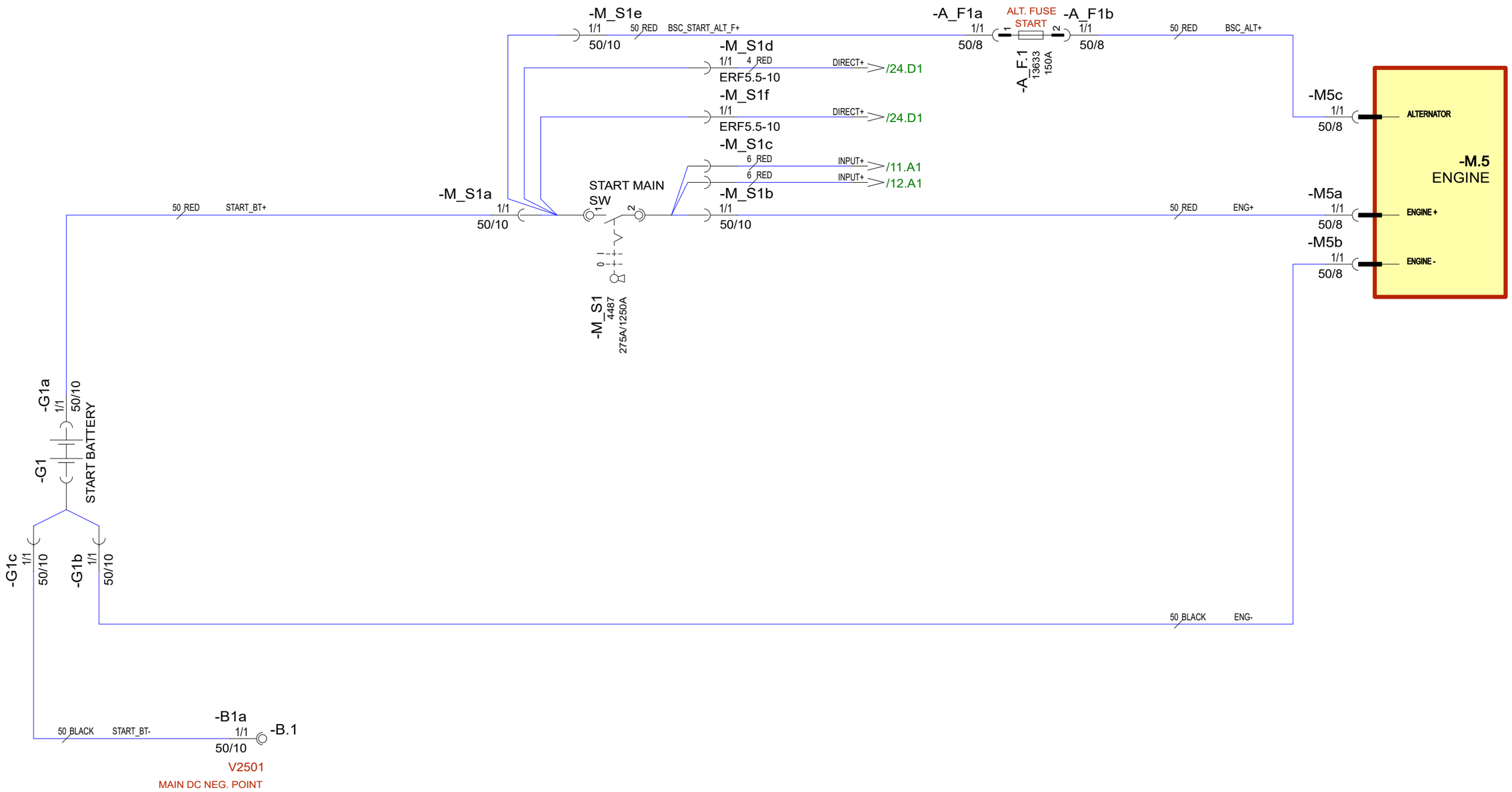

BASIC PACKAGE

02.09.2022	TT	B7: NOT MODIFIED	Date	10.6.2020	This document and all the information contained in it is proprietary and confidential information of Axopar Boats Oy. Neither this document nor any of the information contained herein may be reproduced, disclosed to others or used in any purpose other then for the prpose it has been provided without theprior writen permission of Axopar Boats Oy	Axopar			
1.3.2024	PF	B8: 2005068; NOT MODIFIED	Drawing by	TuM		Boat	Sub-product code	Product code	Project ID
26.10.2021	VV	B6: NOT MODIFIED.	Sheet rev.	8	AXOPAR / BRABUS MARINE	22	DIAGRAM - SINGLE BATTERY	HL	7 / 49
Date of modification	Modified by	Description	Project rev.	B		Boat model	Title	Loc	Sheet

12VDC

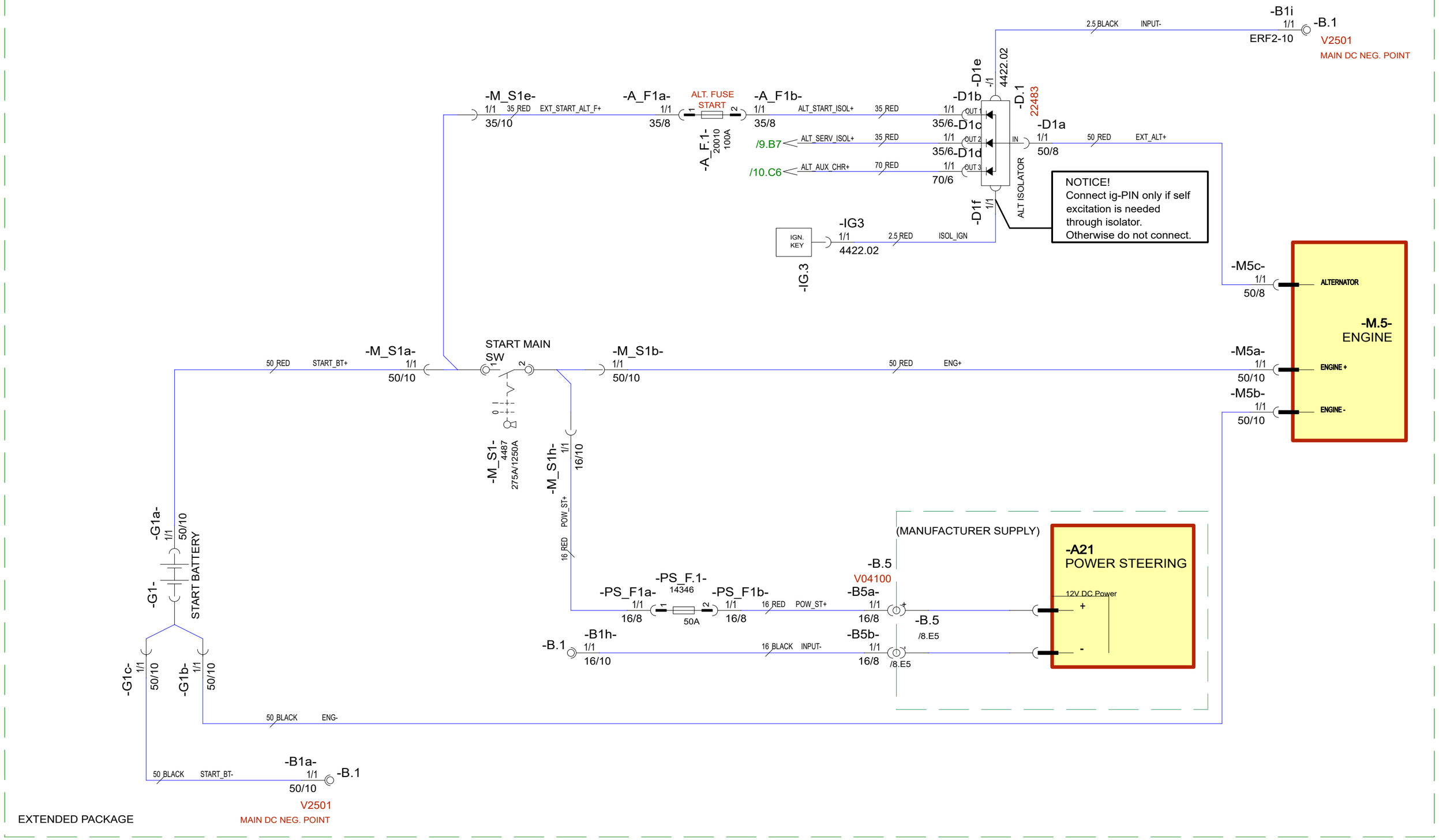

EXTENDED PACKAGE

02.09.2022	TT	B7: NOT MODIFIED	Date	11.5.2020	This document and all the information contained in it is proprietary and confidential information of Axopar Boats Oy. Neither this document nor any of the information contained herein may be reproduced, disclosed to others or used in any purpose other then for the prpose it has been provided without theprior writen permission of Axopar Boats Oy	Axopar			
1.3.2024	PF	B8: 2005068; NOT MODIFIED	Drawing by	TuM		Boat	Sub-product code	Product code	Project ID
26.10.2021	VV	B6: NOT MODIFIED.	Sheet rev.	8	AXOPAR / BRABUS MARINE	22	DIAGRAM - DUAL BATTERY, START	HL	8 / 49
Date of modification	Modified by	Description	Project rev.	B		Boat model	Title	Loc	Sheet

12VDC

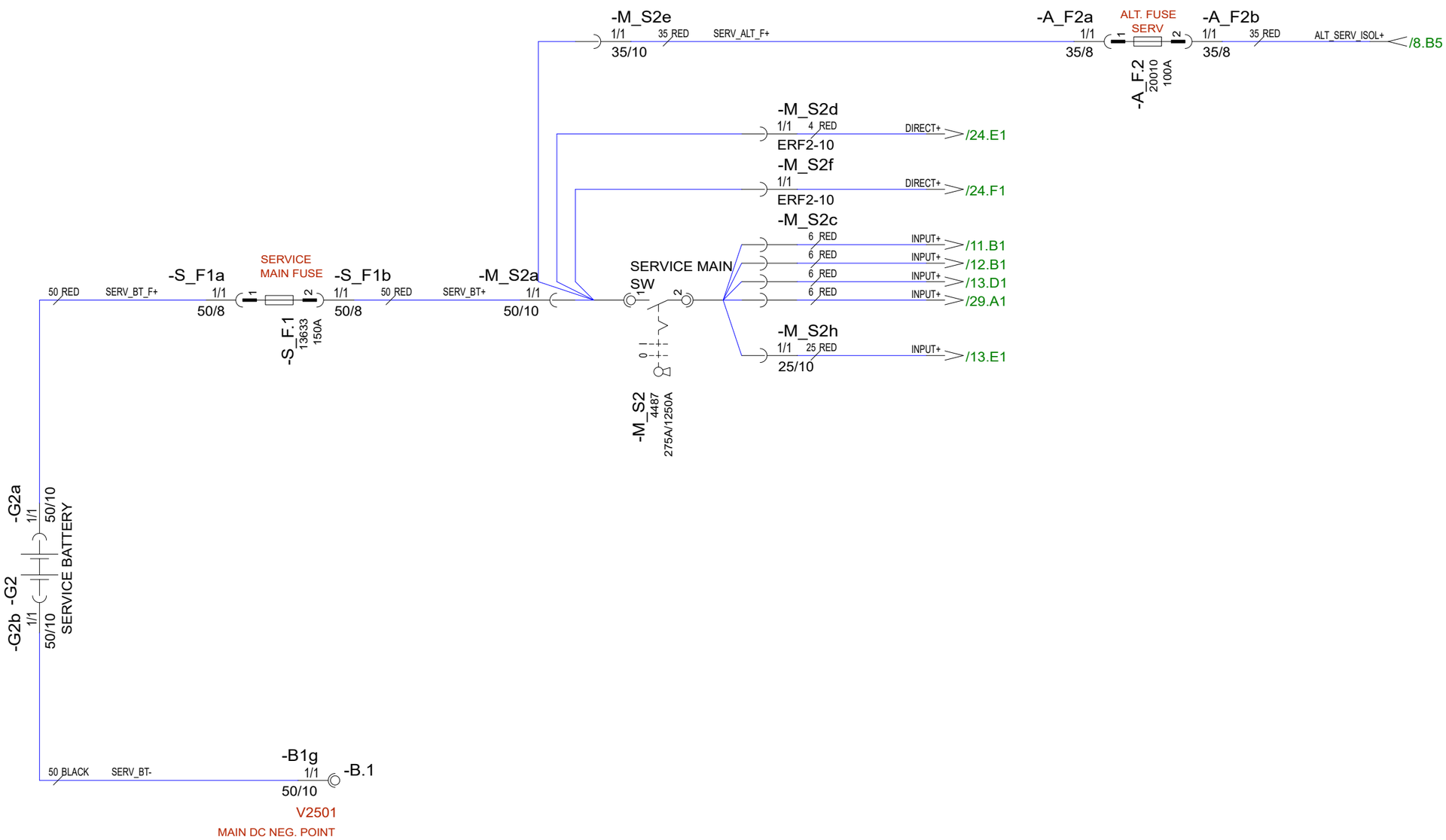

EXTENDED PACKAGE

02.09.2022	TT	B7: NOT MODIFIED	Date	14.6.2020	This document and all the information contained in it is proprietary and confidential information of Axopar Boats Oy. Neither this document nor any of the information contained herein may be reproduced, disclosed to others or used in any purpose other then for the prpose it has been provided without theprior writen permission of Axopar Boats Oy	Axopar			
1.3.2024	PF	B8: 2005068; NOT MODIFIED	Drawing by	TuM		Boat	Sub-product code	Product code	Project ID
26.10.2021	VV	B6: NOT MODIFIED.	Sheet rev.	8	AXOPAR / BRABUS MARINE	22	DIAGRAM - DUAL BATTERY, SERVICE	HL	9 / 49
Date of modification	Modified by	Description	Project rev.	B		Boat model	Title	Loc	Sheet

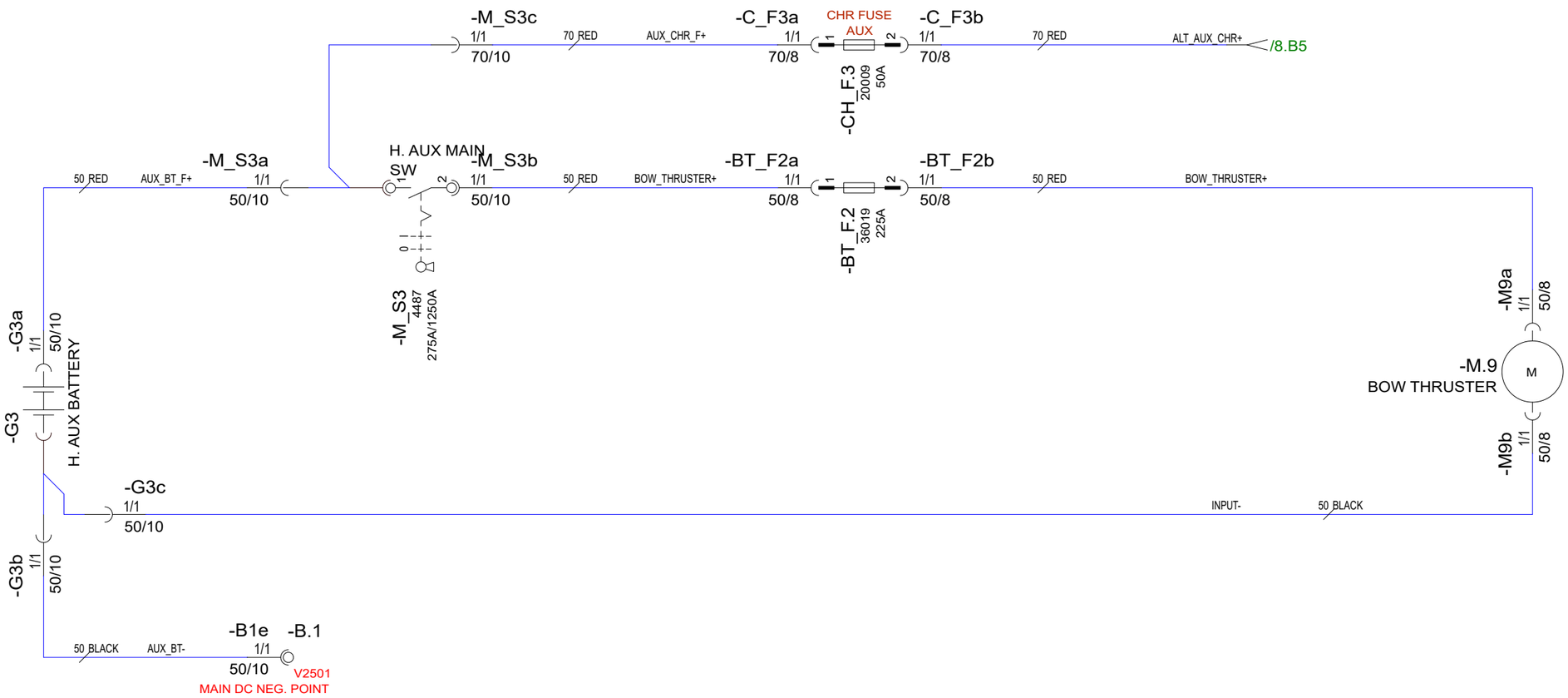

			Date 02.09.2022	This document and all the information contained in it is proprietary and confidential information of Axopar Boats Oy. Neither this document nor any of the information contained herein may be reproduced, disclosed to others or used in any purpose other then for the prpose it has been provided without theprior writen permission of Axopar Boats Oy	Axopar			
1.3.2024	PF	B8: 2005068; NOT MODIFIED	Drawing by TT		Boat	Sub-product code	Product code	Project ID
02.09.2022	TT	B6: INTRODUCED DRAWING	Sheet rev. 8	AXOPAR / BRABUS MARINE	22	DIAGRAM - BOW THRUSTER	HL	10 / 49
Date of modification	Modified by	Description	Project rev. B		Boat model	Title	Loc	Sheet

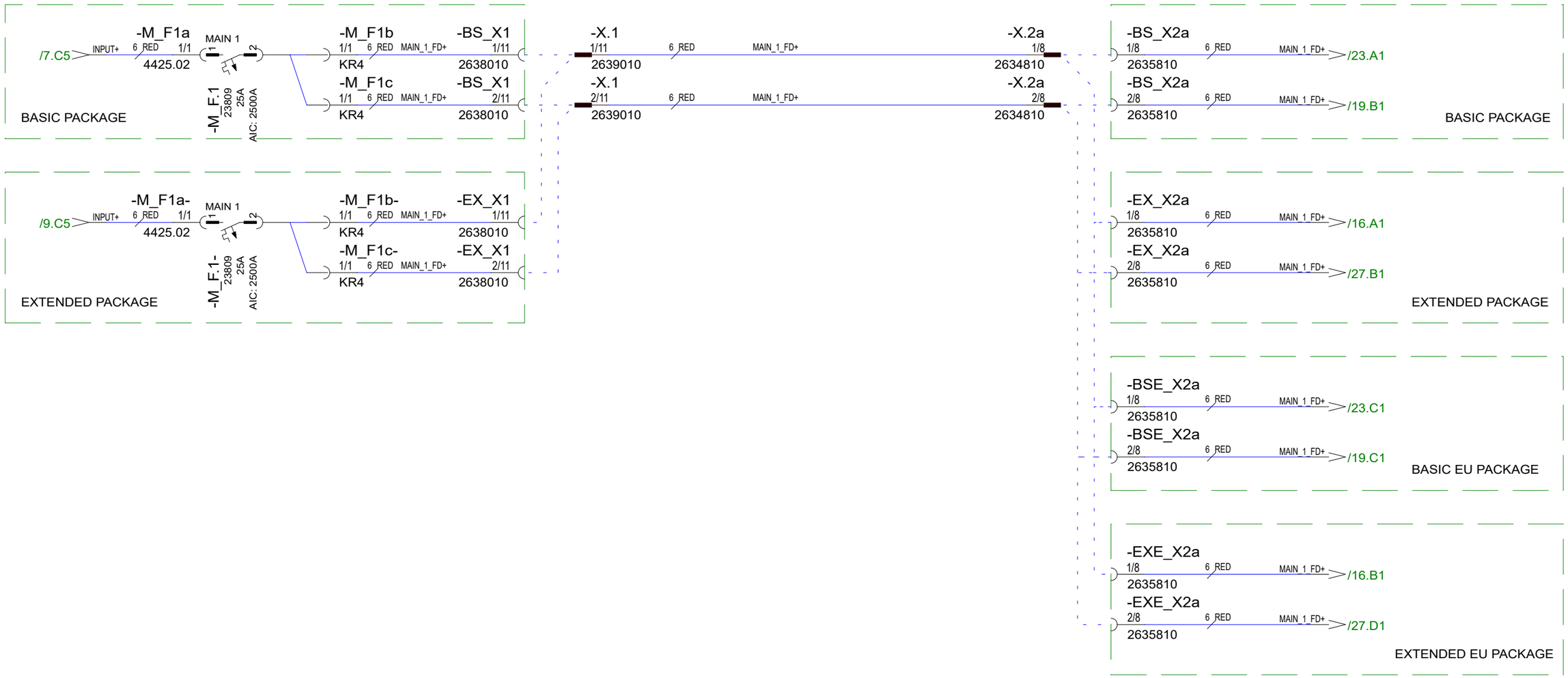

12VDC

02.09.2022	TT	B7: NOT MODIFIED	Date	11.5.2020
1.3.2024	PF	B8: 2005068; NOT MODIFIED	Drawing by	TuM
26.10.2021	VV	B6: NOT MODIFIED.	Sheet rev.	8
Date of modification	Modified by	Description	Project rev.	B

This document and all the information contained in it is proprietary and confidential information of Axopar Boats Oy. Neither this document nor any of the information contained herein may be reproduced, disclosed to others or used in any purpose other then for the prpose it has been provided without theprior writen permission of Axopar Boats Oy

Axopar			
Boat	Sub-product code	Product code	Project ID
22	DIAGRAM - MAIN FUSES	HL	11/ 49
Boat model	Title	Loc	Sheet

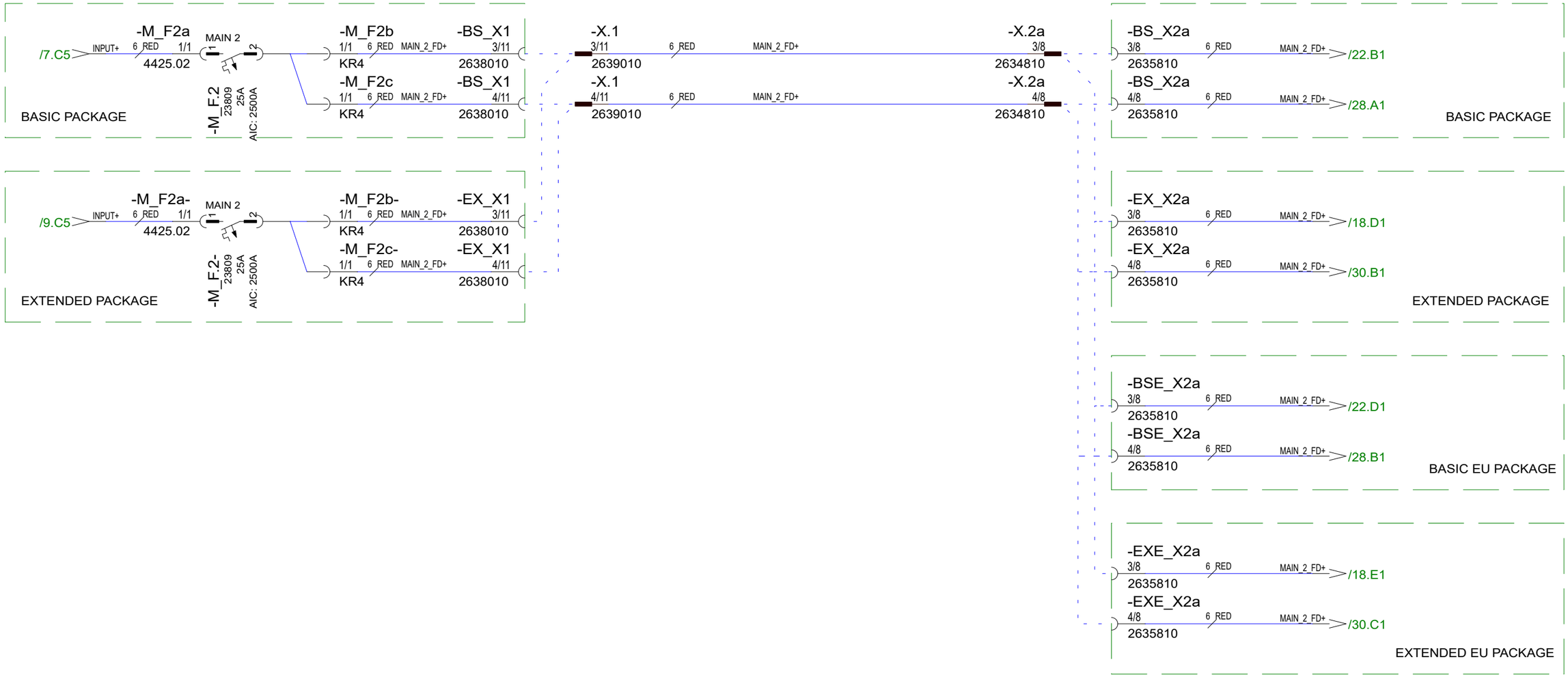

Date of modification	Modified by	Description
02.09.2022	TT	B7: NOT MODIFIED
1.3.2024	PF	B8: 2005068; NOT MODIFIED
26.10.2021	VV	B6: NOT MODIFIED.

Date	11.5.2020
Drawing by	TuM
Sheet rev.	8
Project rev.	B

This document and all the information contained in it is propriertary and confidential information of Axopar Boats Oy. Neither this document nor any of the information contained herein may be reproduced, disclosed to others or used in any purpose other then for the prpose it has been provided without theprior writen permission of Axopar Boats Oy

AXOPAR BRABUS MARINE

Axopar Boat	Sub-product code	Product code	Project ID
22 Boat model	DIAGRAM - MAIN FUSES Title	HL Loc	12 / 49 Sheet

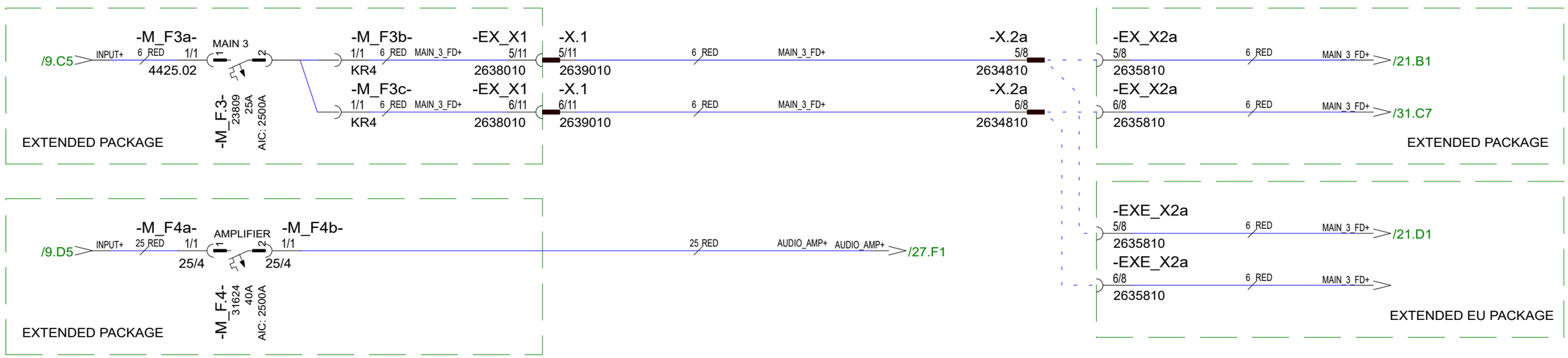

02.09.2022	TT	B7: NOT MODIFIED	Date	11.5.2020	NAVIX.	Axopar		
1.3.2024	PF	B8: 2005068; NOT MODIFIED	Drawing by	TuM		Boat	Sub-product code	Product code	Project ID
26.10.2021	VV	B6: NOT MODIFIED.	Sheet rev.	8		22	DIAGRAM - MAIN FUSES	HL	13 / 49
Date of modification	Modified by	Description	Project rev.	B	Copyright by	Boat model	Title	Loc	Sheet

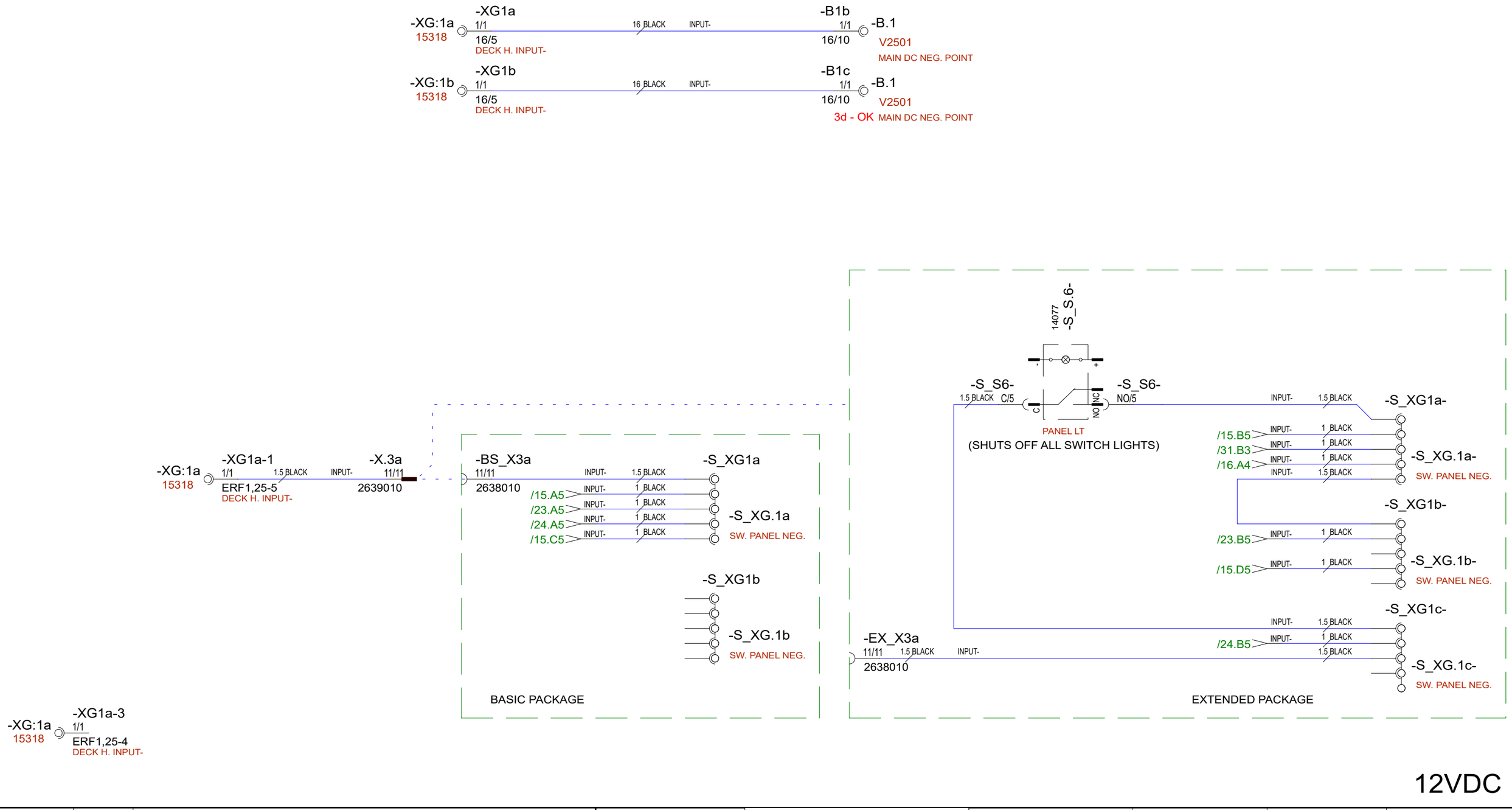

02.09.2022	TT	B7: NOT MODIFIED	Date	10.6.2020	This document and all the information contained in it is proprietary and confidential information of Axopar Boats Oy. Neither this document nor any of the information contained herein may be reproduced, disclosed to others or used in any purpose other then for the propse it has been provided without theprior writen permission of Axopar Boats Oy	Axopar			
1.3.2024	PF	B8: 2005068; NOT MODIFIED	Drawing by	TuM		Boat	Sub-product code	Product code	Project ID
26.10.2021	VV	B6: NOT MODIFIED.	Sheet rev.	8	AXOPAR / BRABUS MARINE	22	DIAGRAM - INPUT-	HL	14 / 49
Date of modification	Modified by	Description	Project rev.	B		Boat model	Title	Loc	Sheet

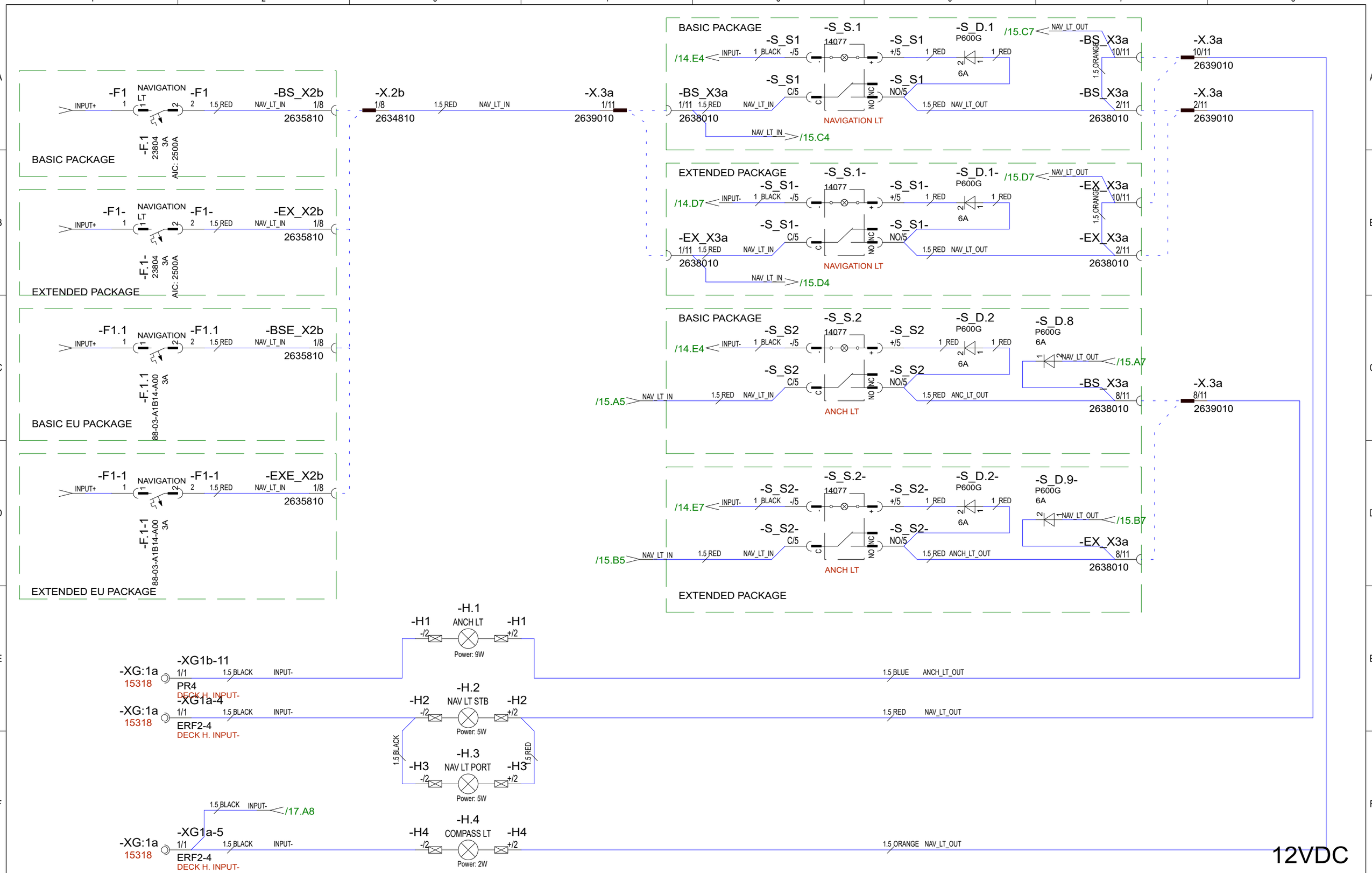

02.09.2022	TT	B7: NOT MODIFIED	Date	11.5.2020	This document and all the information contained in it is proprietary and confidential information of Axopar Boats Oy. Neither this document nor any of the information contained herein may be reproduced, disclosed to others or used in any purpose other then for the prpose it has been provided without theprior writen permission of Axopar Boats Oy	Axopar		
1.3.2024	PF	B8: 2005068; NOT MODIFIED	Drawing by	TuM		Boat	Sub-product code	Product code	Project ID
26.10.2021	VV	B6: NOT MODIFIED.	Sheet rev.	8	AXOPAR / BRABUS MARINE	22	DIAGRAM - NAVIGATION LT	HL	15 / 49
Date of modification	Modified by	Description	Project rev.	B		Boat model	Title	Loc	Sheet

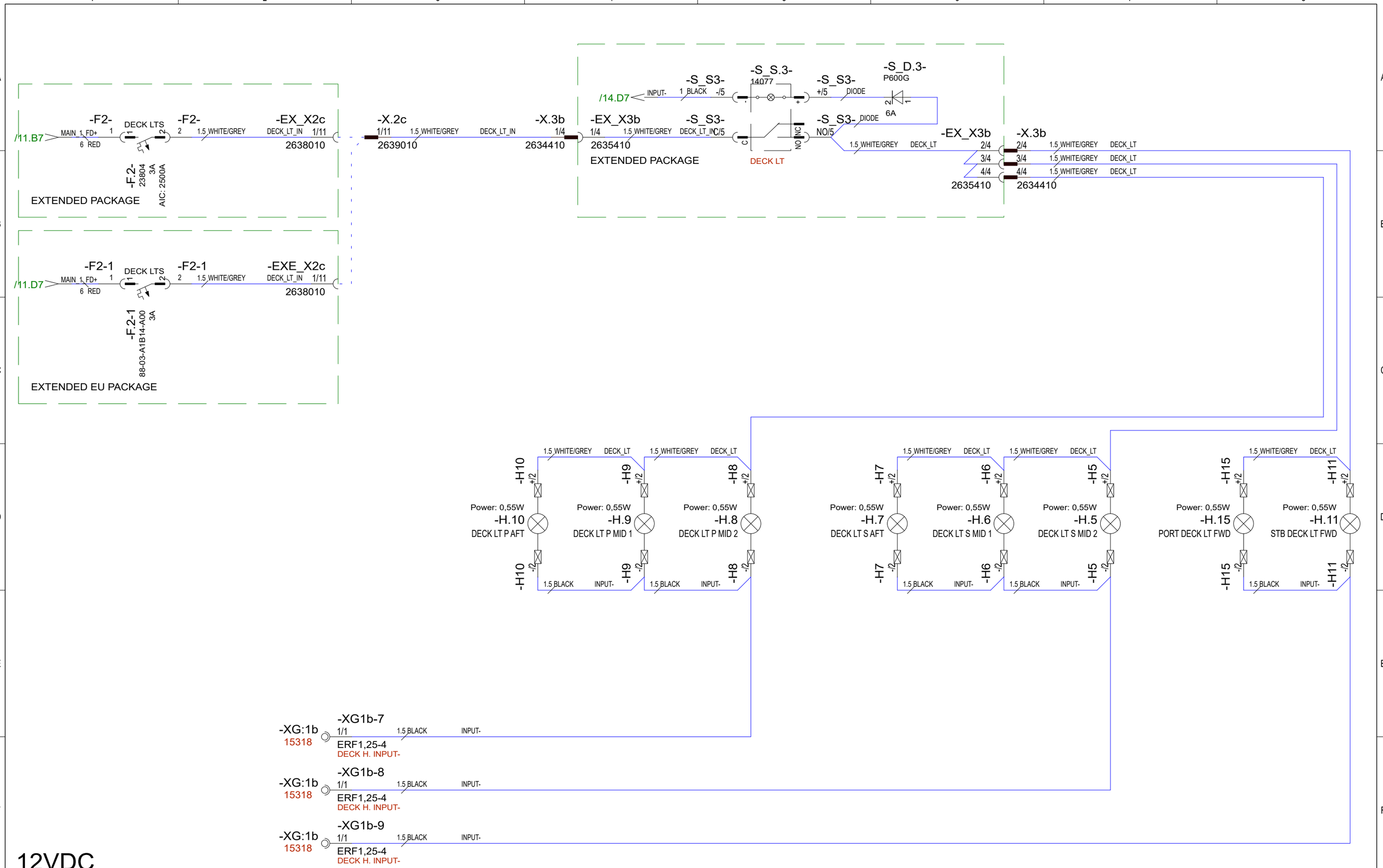

02.09.2022	TT	B7: NOT MODIFIED	Date	11.5.2020	This document and all the information contained in it is proprietary and confidential information of Axopar Boats Oy. Neither this document nor any of the information contained herein may be reproduced, disclosed to others or used in any purpose other then for the prpose it has been provided without theprior writen permission of Axopar Boats Oy	Axopar		
1.3.2024	PF	B8: 2005068; NOT MODIFIED	Drawing by	TuM		Boat	Sub-product code	Product code	Project ID
26.10.2021	VV	B6: NOT MODIFIED.	Sheet rev.	8	AXOPAR / BRABUS MARINE	22	DIAGRAM - DECK LT	HL	16 / 49
Date of modification	Modified by	Description	Project rev.	B		Boat model	Title	Loc	Sheet

12VDC

02.09.2022	TT	B7: NOT MODIFIED	Date	11.5.2020
1.3.2024	PF	B8: 2005068; NOT MODIFIED	Drawing by	TuM
26.10.2021	VV	B6: NOT MODIFIED.	Sheet rev.	8
Date of modification	Modified by	Description	Project rev.	B

This document and all the information contained in it is proprietary and confidential information of Axopar Boats Oy. Neither this document nor any of the information contained herein may be reproduced, disclosed to others or used in any purpose other then for the prpose it has been provided without theprior writen permission of Axopar Boats Oy

Axopar Boat	Sub-product code	Product code	Project ID
22 Boat model	DIAGRAM - INTERIOR LT Title	HL Loc	17 / 49 Sheet

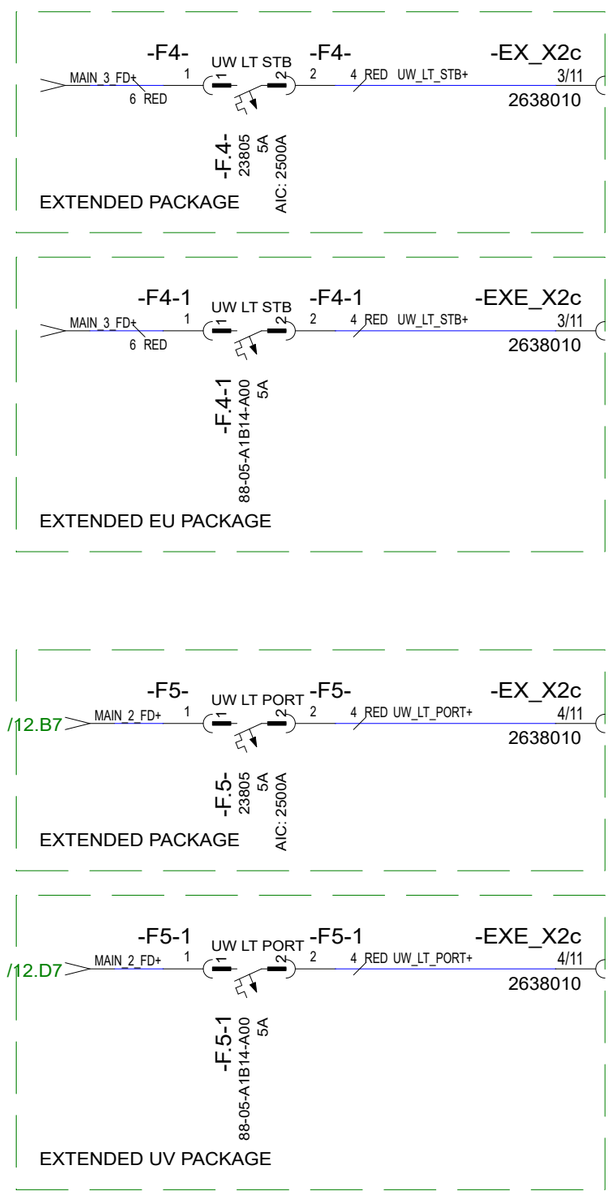

12VDC

02.09.2022	TT	B7: NOT MODIFIED	Date	9.6.2020	This document and all the information contained in it is proprietary and confidential information of Axopar Boats Oy. Neither this document nor any of the information contained herein may be reproduced, disclosed to others or used in any purpose other then for the prpose it has been provided without theprior writen permission of Axopar Boats Oy	Axopar			
1.3.2024	PF	B8: 2005068; NOT MODIFIED	Drawing by	TuM		Boat	Sub-product code	Product code	Project ID
26.10.2021	VV	B6: NOT MODIFIED.	Sheet rev.	8	AXOPAR / BRABUS MARINE	22	DIAGRAM - UNDER WATER LIGHTS	HL	18 / 49
Date of modification	Modified by	Description	Project rev.	B		Boat model	Title	Loc	Sheet

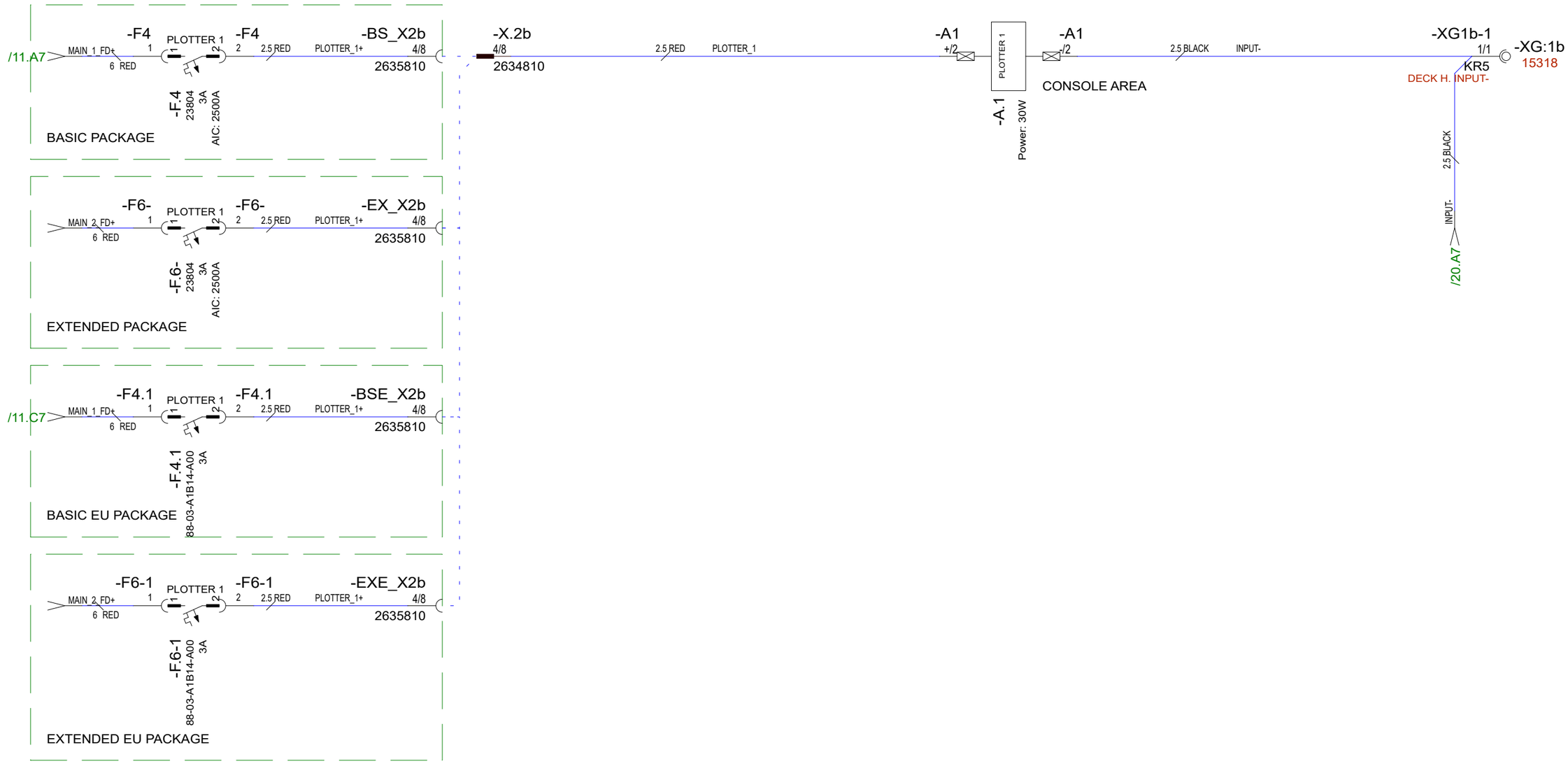

12VDC

02.09.2022	TT	B7: NOT MODIFIED	Date	9.6.2020	This document and all the information contained in it is proprietary and confidential information of Axopar Boats Oy. Neither this document nor any of the information contained herein may be reproduced, disclosed to others or used in any purpose other then for the prpose it has been provided without theprior writen permission of Axopar Boats Oy	Axopar			
1.3.2024	PF	B8: 2005068; NOT MODIFIED	Drawing by	TuM		Boat	Sub-product code	Product code	Project ID
26.10.2021	VV	B6: NOT MODIFIED.	Sheet rev.	8	AXOPAR / BRABUS MARINE	22	DIAGRAM - NAVIGATION EQ.	HL	19 / 49
Date of modification	Modified by	Description	Project rev.	B		Boat model	Title	Loc	Sheet

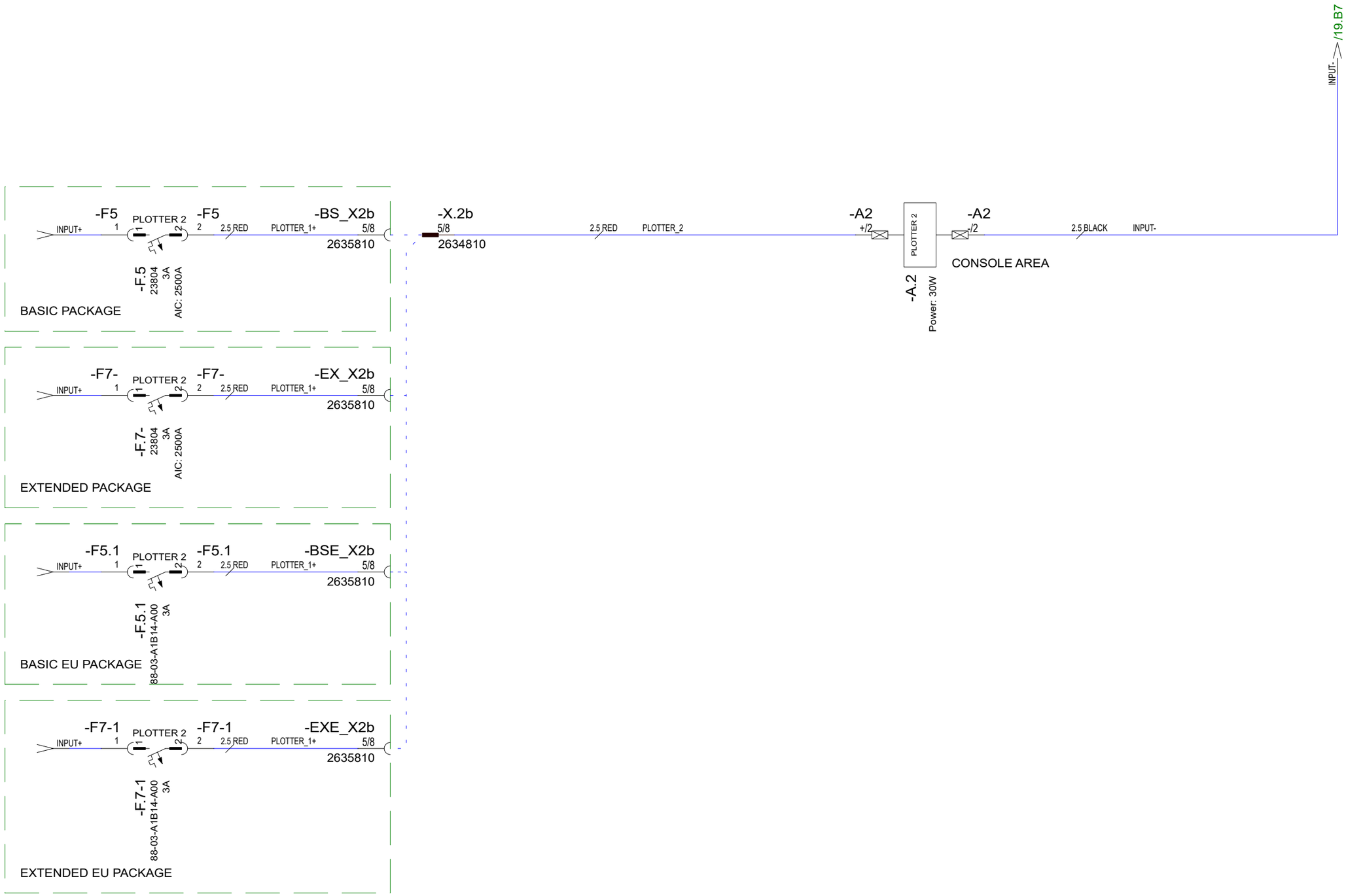

12VDC

02.09.2022	TT	B7: NOT MODIFIED	Date	9.6.2020
1.3.2024	PF	B8: 2005068; NOT MODIFIED	Drawing by	TuM
26.10.2021	VV	B6: NOT MODIFIED.	Sheet rev.	8
Date of modification	Modified by	Description	Project rev.	B

This document and all the information contained in it is proprietary and confidential information of Axopar Boats Oy. Neither this document nor any of the information contained herein may be reproduced, disclosed to others or used in any purpose other then for the prpose it has been provided without theprior writen permission of Axopar Boats Oy

AXOPAR BRABUS MARINE

Axopar			
Boat	Sub-product code	Product code	Project ID
22	DIAGRAM - NAVIGATION EQ.	HL	20 / 49
Boat model	Title	Loc	Sheet

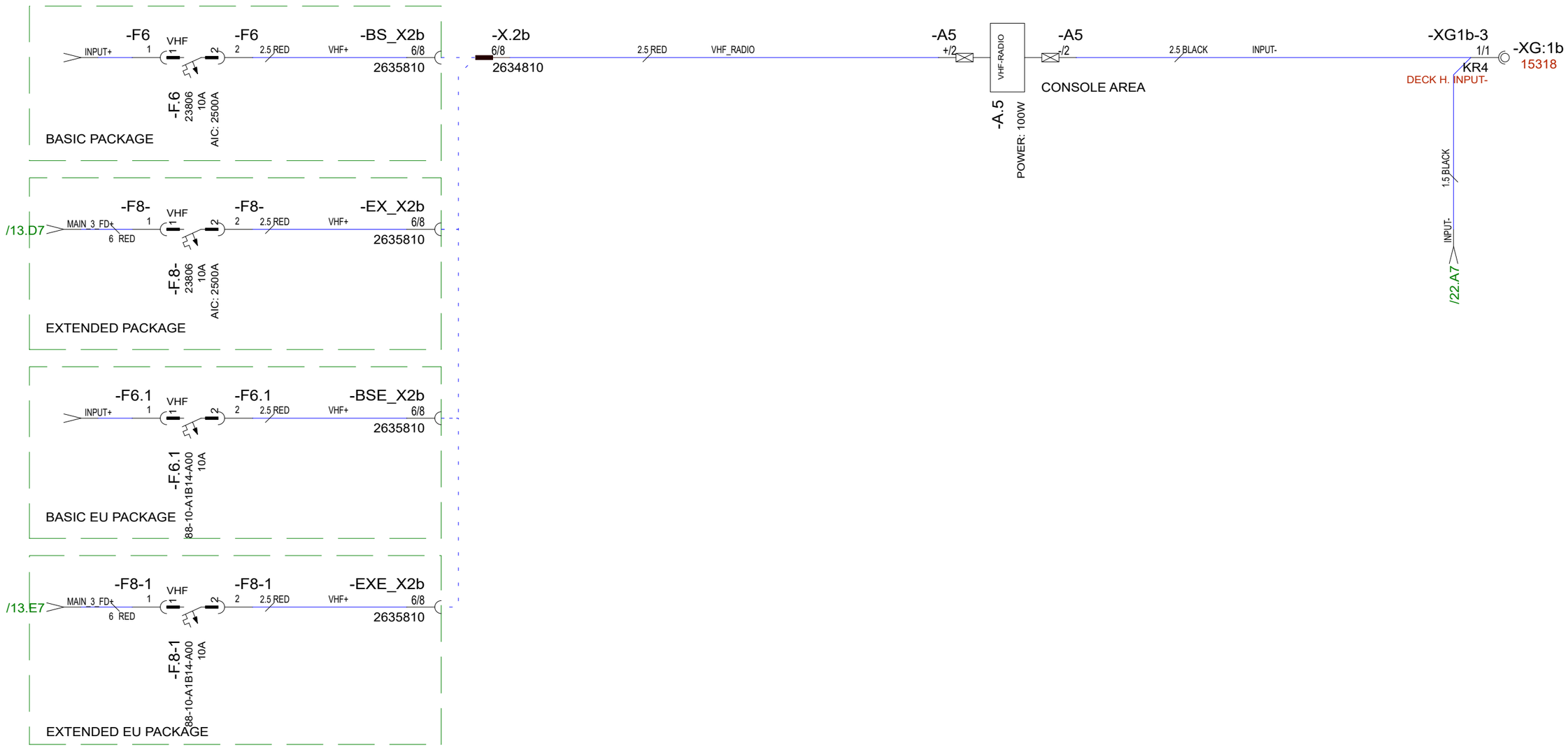

12VDC

02.09.2022	TT	B7: NOT MODIFIED	Date	9.6.2020	This document and all the information contained in it is proprietary and confidential information of Axopar Boats Oy. Neither this document nor any of the information contained herein may be reproduced, disclosed to others or used in any purpose other then for the prpose it has been provided without theprior writen permission of Axopar Boats Oy	Axopar			
1.3.2024	PF	B8: 2005068; NOT MODIFIED	Drawing by	TuM		Boat	Sub-product code	Product code	Project ID
26.10.2021	VV	B6: NOT MODIFIED.	Sheet rev.	8	AXOPAR / BRABUS MARINE	22	DIAGRAM - NAVIGATION EQ.	HL	21/ 49
Date of modification	Modified by	Description	Project rev.	B		Boat model	Title	Loc	Sheet

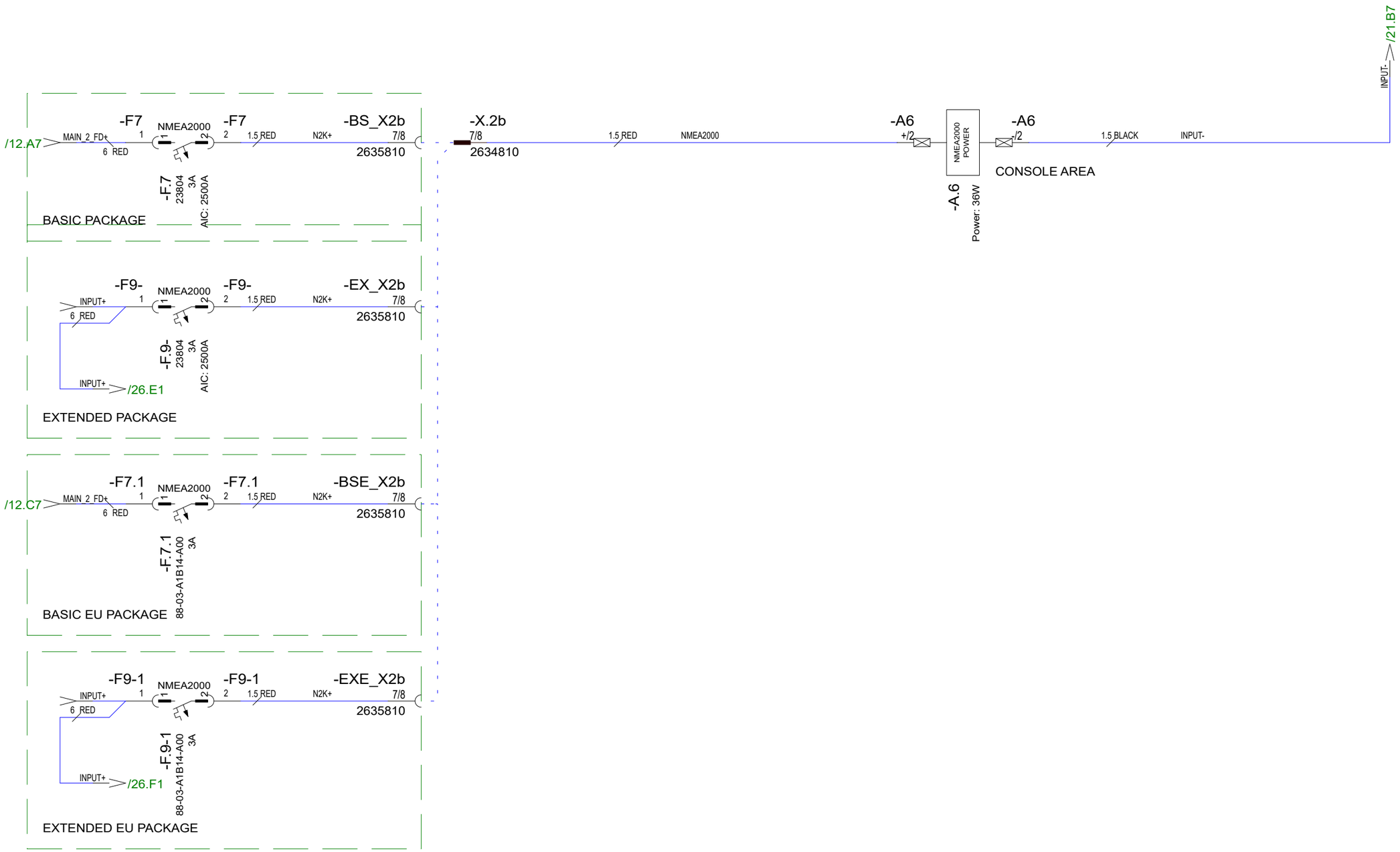

12VDC

02.09.2022	TT	B7: NOT MODIFIED	Date	9.6.2020
1.3.2024	PF	B8: 2005068; NOT MODIFIED	Drawing by	TuM
26.10.2021	VV	B6: NOT MODIFIED.	Sheet rev.	8
Date of modification	Modified by	Description	Project rev.	B

This document and all the information contained in it is proprietary and confidential information of Axopar Boats Oy. Neither this document nor any of the information contained herein may be reproduced, disclosed to others or used in any purpose other then for the prpose it has been provided without theprior writen permission of Axopar Boats Oy

Axopar			
Boat	Sub-product code	Product code	Project ID
22	DIAGRAM - NAVIGATION EQ.	HL	22 / 49
Boat model	Title	Loc	Sheet

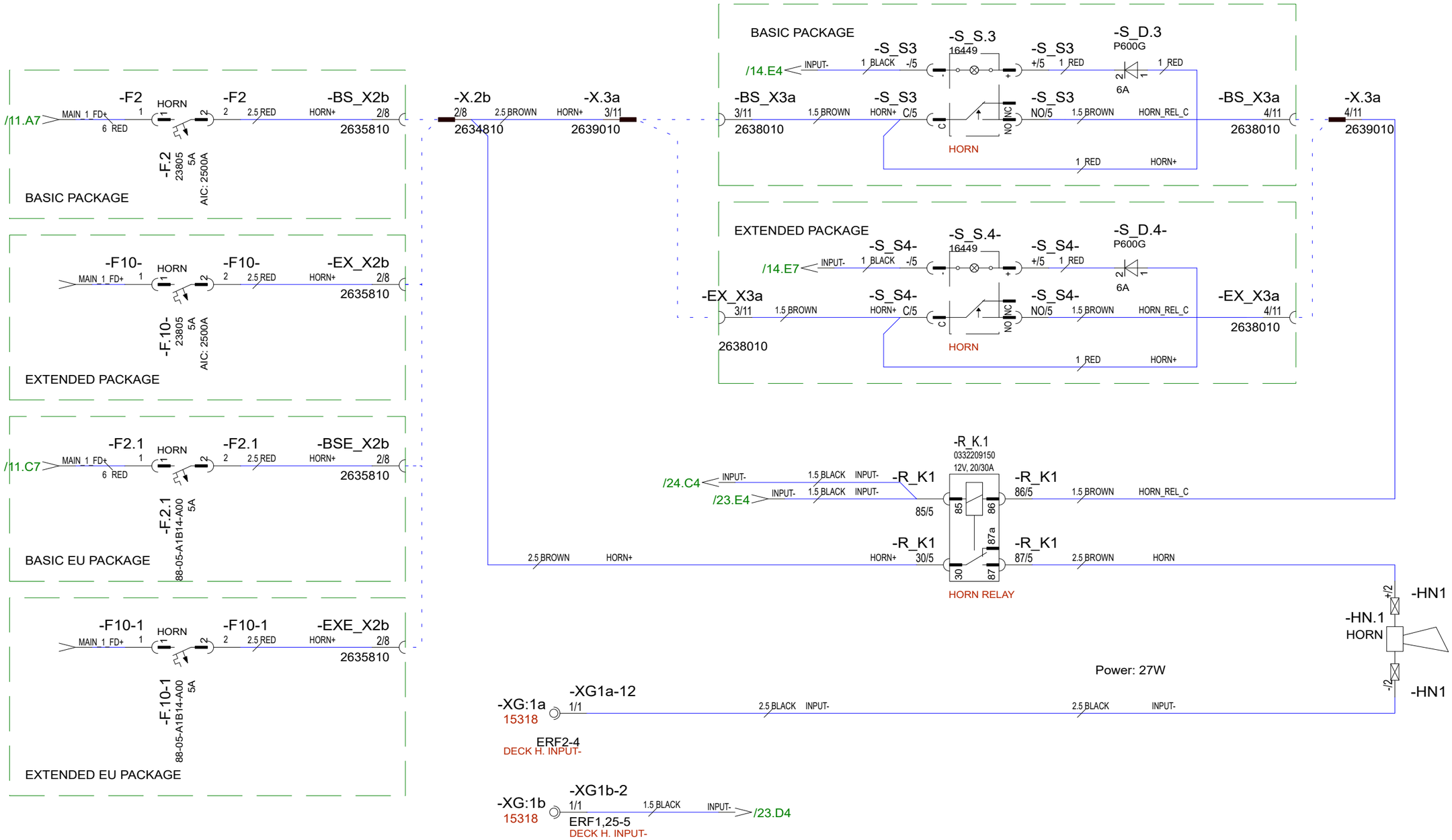

12VDC

02.09.2022	TT	B7: NOT MODIFIED	Date	9.6.2020	This document and all the information contained in it is proprietary and confidential information of Axopar Boats Oy. Neither this document nor any of the information contained herein may be reproduced, disclosed to others or used in any purpose other then for the prpose it has been provided without theprior writen permission of Axopar Boats Oy	Axopar			
1.3.2024	PF	B8: 2005068; NOT MODIFIED	Drawing by	TuM		Boat	Sub-product code	Product code	Project ID
26.10.2021	VV	B6: NOT MODIFIED.	Sheet rev.	8	AXOPAR / BRABUS MARINE	22	DIAGRAM - HORN	HL	23 / 49
Date of modification	Modified by	Description	Project rev.	B		Boat model	Title	Loc	Sheet

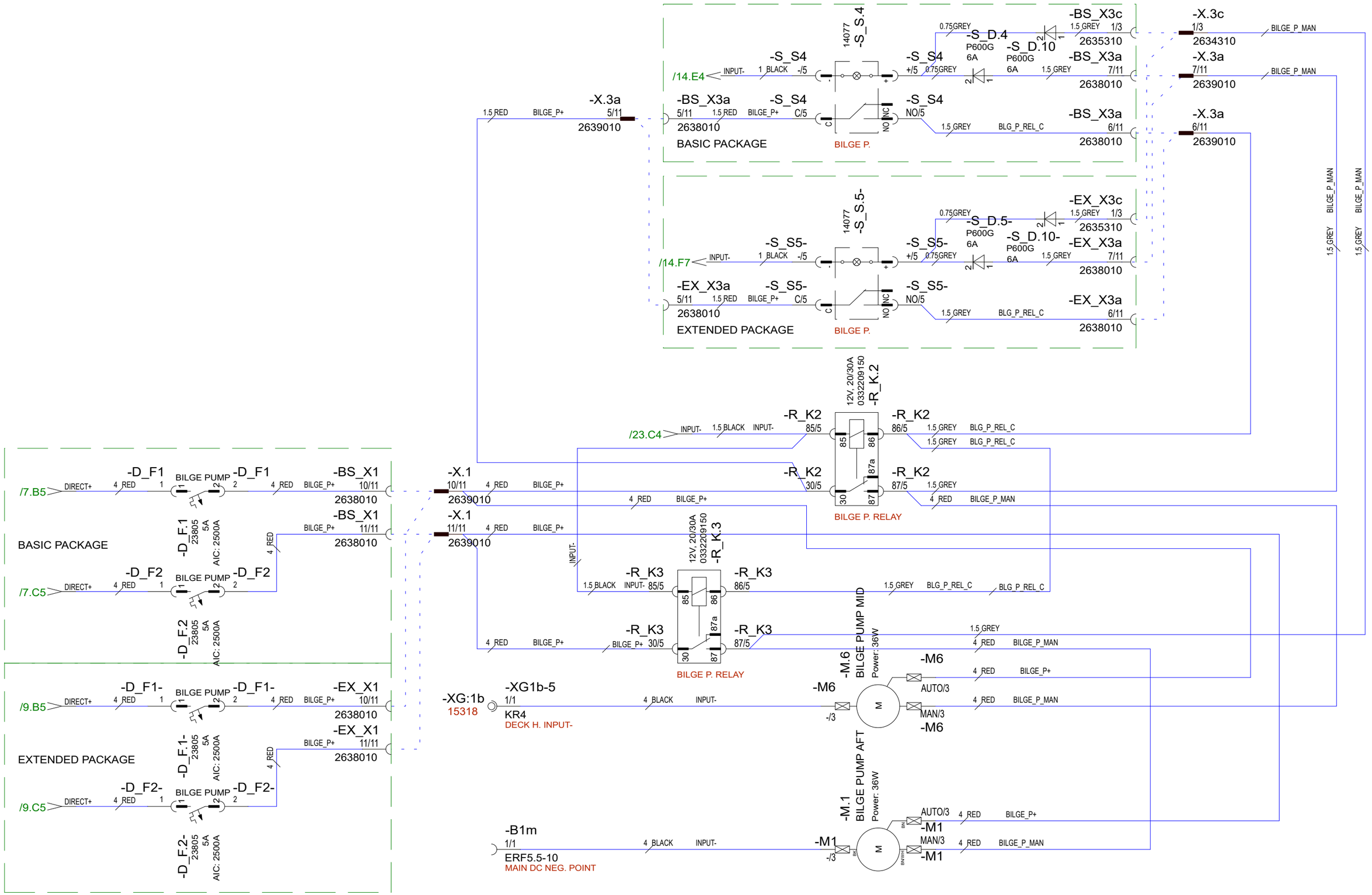

12VDC

02.09.2022	TT	B7: NOT MODIFIED	Date	9.6.2020	This document and all the information contained in it is proprietary and confidential information of Axopar Boats Oy. Neither this document nor any of the information contained herein may be reproduced, disclosed to others or used in any purpose other then for the prpose it has been provided without theprior writen permission of Axopar Boats Oy	Axopar			
1.3.2024	PF	B8:2005068;D_F2, R_K3, X3c connector added, BP connections changed	Drawing by	TuM		Boat	Sub-product code	Product code	Project ID
26.10.2021	VV	B6: NOT MODIFIED.	Sheet rev.	8	AXOPAR / BRABUS MARINE	22	DIAGRAM - BILGE PUMP	HL	24 / 49
Date of modification	Modified by	Description	Project rev.	B		Boat model	Title	Loc	Sheet

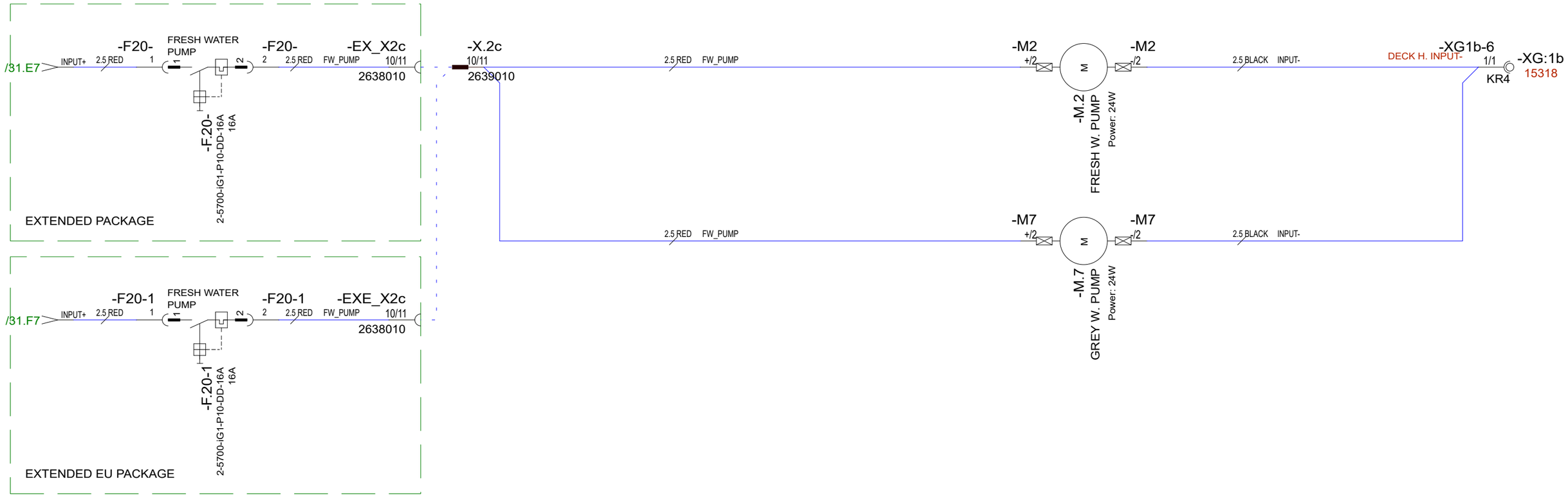

12VDC

02.09.2022	TT	B7: NOT MODIFIED	Date	9.6.2020	This document and all the information contained in it is proprietary and confidential information of Axopar Boats Oy. Neither this document nor any of the information contained herein may be reproduced, disclosed to others or used in any purpose other then for the prpose it has been provided without theprior writen permission of Axopar Boats Oy	Axopar		
1.3.2024	PF	B8: 2005068; NOT MODIFIED	Drawing by	TuM		Boat	Sub-product code	Product code	Project ID
26.10.2021	VV	B6: NOT MODIFIED.	Sheet rev.	8	AXOPAR / BRABUS MARINE	22	DIAGRAM - FRESH W. PUMP	HL	25 / 49
Date of modification	Modified by	Description	Project rev.	B		Boat model	Title	Loc	Sheet

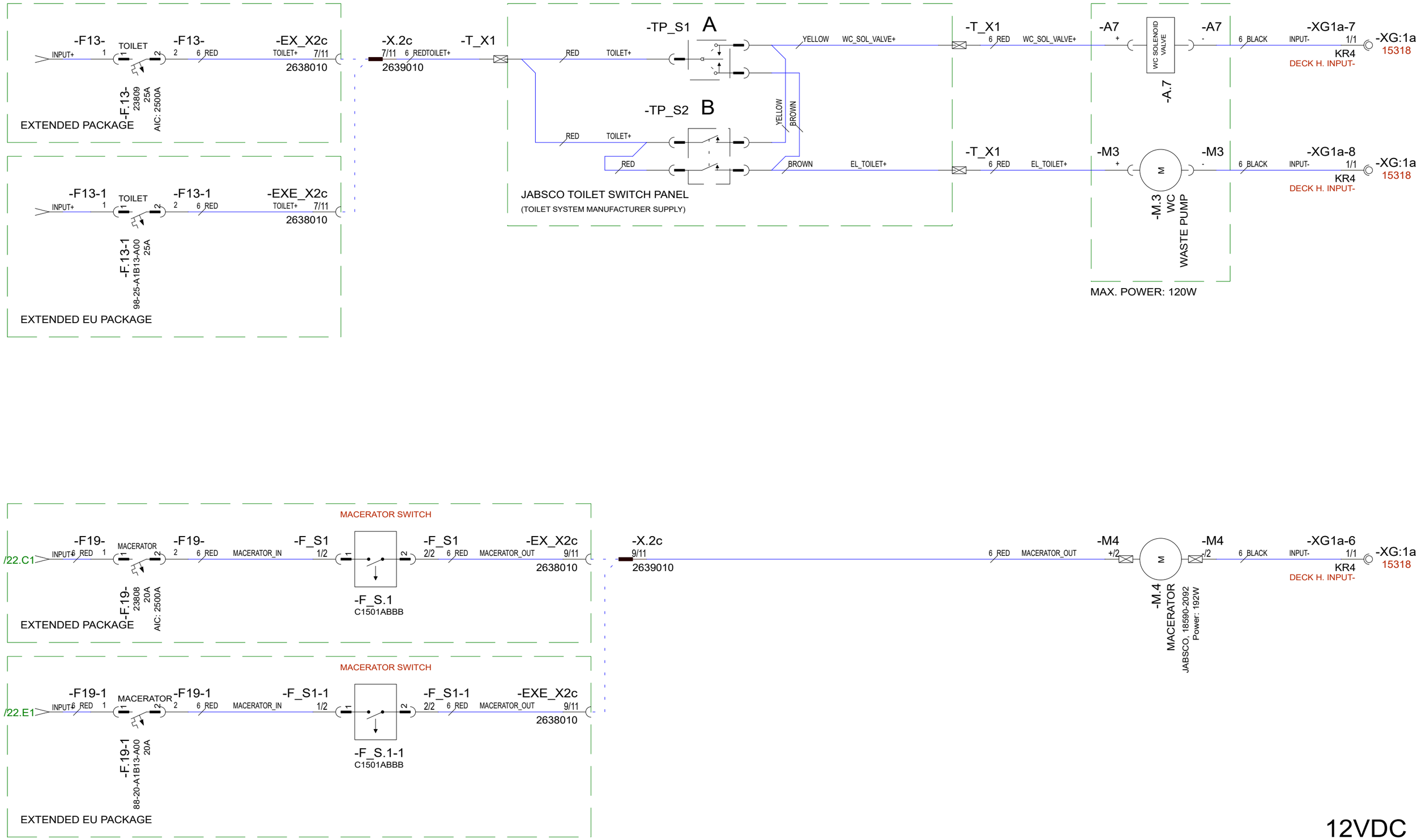

02.09.2022	TT	B7: -T_X1 CONNECTOR CHANGED	Date	10.6.2020	This document and all the information contained in it is proprietary and confidential information of Axopar Boats Oy. Neither this document nor any of the information contained herein may be reproduced, disclosed to others or used in any purpose other then for the prpose it has been provided without theprior writen permission of Axopar Boats Oy	Axopar		
1.3.2024	PF	B8: 2005068; NOT MODIFIED	Drawing by	TuM		Boat	Sub-product code	Product code	Project ID
26.10.2021	VV	B6: NOT MODIFIED.	Sheet rev.	8	AXOPAR / BRABUS MARINE	22	DIAGRAM - TOILET/MACERATOR	HL	26 / 49
Date of modification	Modified by	Description	Project rev.	B		Boat model	Title	Loc	Sheet

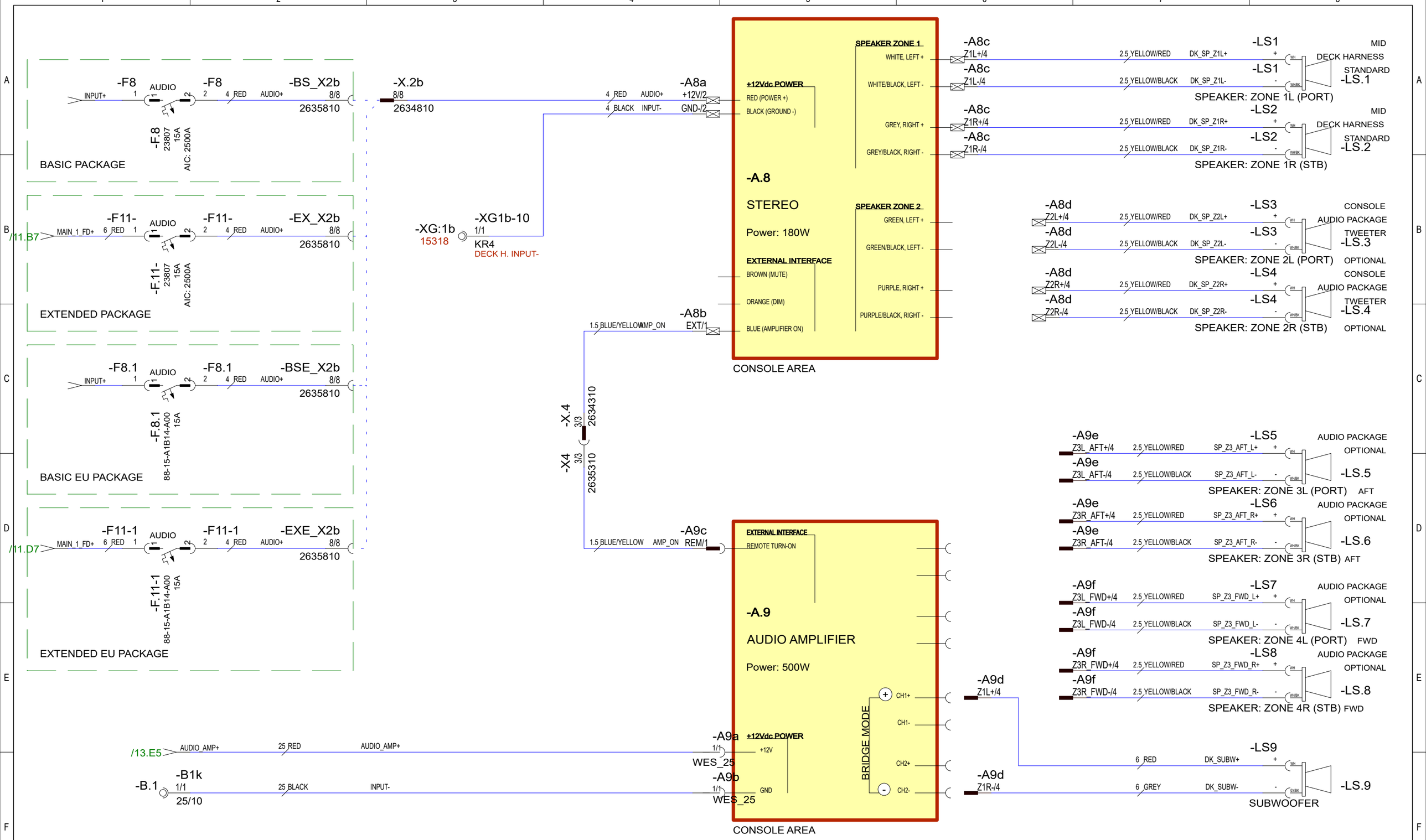

12VDC

02.09.2022	TT	B7: NOT MODIFIED	Date	10.6.2020
1.3.2024	PF	B8: 2005068; NOT MODIFIED	Drawing by	TuM
26.10.2021	VV	B6: NOT MODIFIED.	Sheet rev.	8
Date of modification	Modified by	Description	Project rev.	B

This document and all the information contained in it is proprietary and confidential information of Axopar Boats Oy. Neither this document nor any of the information contained herein may be reproduced, disclosed to others or used in any purpose other then for the prpose it has been provided without theprior writen permission of Axopar Boats Oy

AXOPAR BRABUS MARINE

Axopar			
Boat	Sub-product code	Product code	Project ID
22	DIAGRAM - AUDIO SYSTEM	HL	27 / 49
Boat model	Title	Loc	Sheet

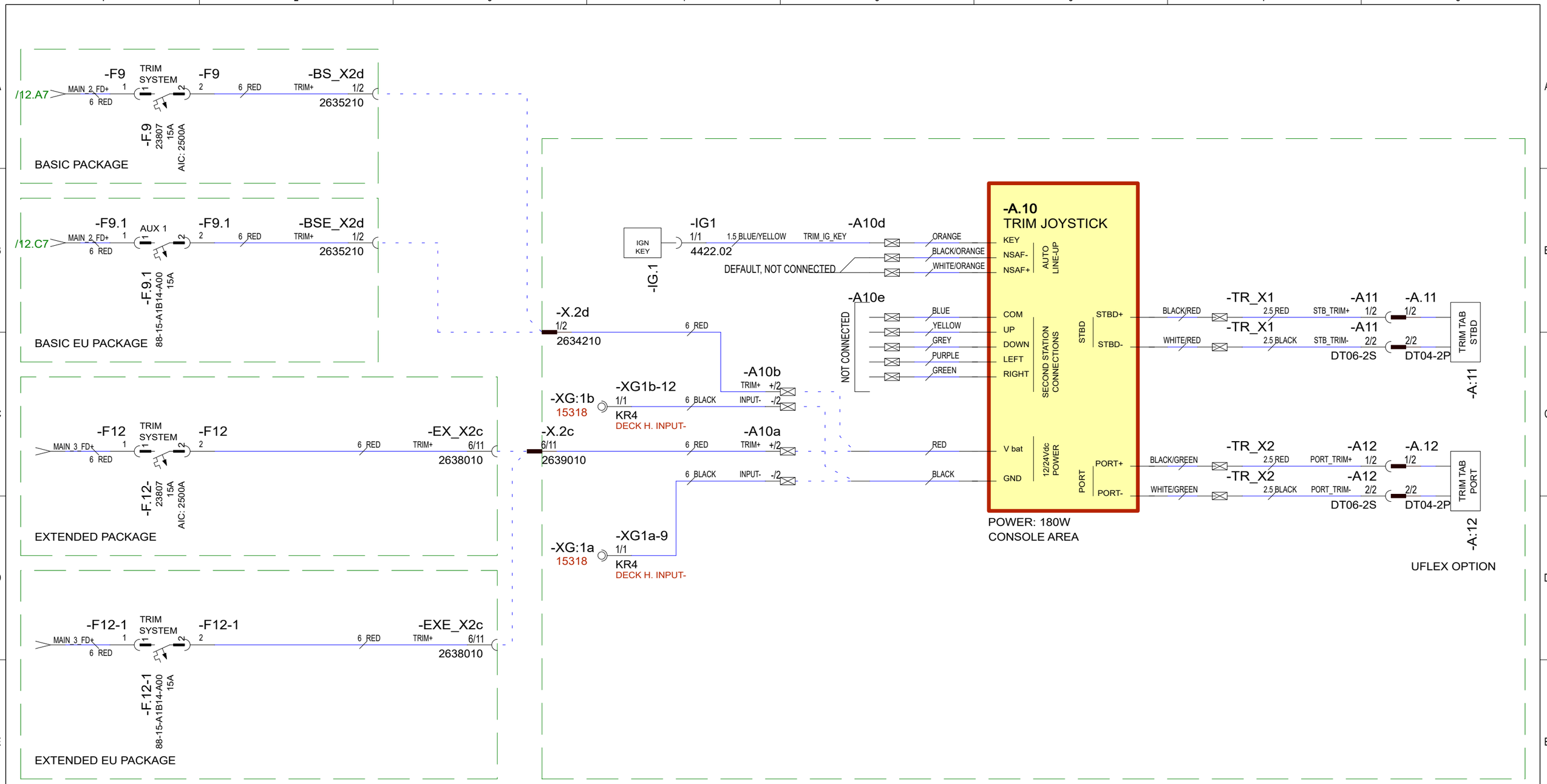

12VDC

02.09.2022	TT	B7: -TR_X1&-TR_X2 CONNECTORS CHANGED	Date	11.5.2020	This document and all the information contained in it is proprietary and confidential information of Axopar Boats Oy. Neither this document nor any of the information contained herein may be reproduced, disclosed to others or used in any purpose other then for the prpose it has been provided without theprior writen permission of Axopar Boats Oy	Axopar		
1.3.2024	PF	B8: 2005068; NOT MODIFIED	Drawing by	TuM		Boat	Sub-product code	Product code / Project ID
26.10.2021	VV	B6: NOT MODIFIED.	Sheet rev.	8	AXOPAR / BRABUS MARINE	22	DIAGRAM - TRIM SYSTEM	HL
Date of modification	Modified by	Description	Project rev.	B		Boat model	Title	Loc / Sheet 28 / 49

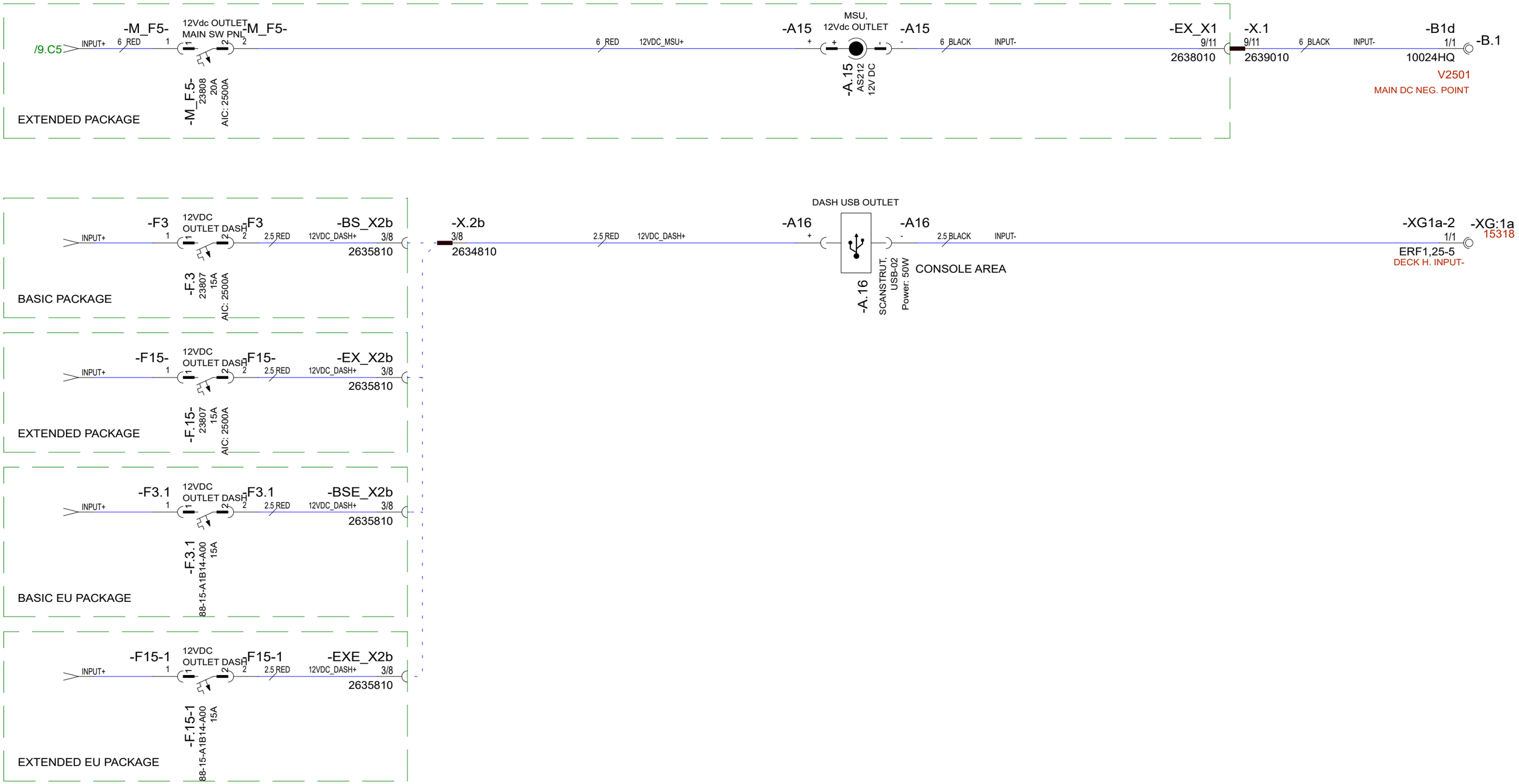

12VDC

02.09.2022	TT	B7: NOT MODIFIED	Date	9.6.2020	This document and all the information contained in it is proprietary and confidential information of Axopar Boats Oy. Neither this document nor any of the information contained herein may be reproduced, disclosed to others or used in any purpose other then for the prpose it has been provided without theprior writen permission of Axopar Boats Oy	Axopar			
1.3.2024	PF	B8: 2005068; NOT MODIFIED	Drawing by	TuM		Boat	Sub-product code	Product code	Project ID
26.10.2021	VV	B6: NOT MODIFIED.	Sheet rev.	8	AXOPAR / BRABUS MARINE	22	DIAGRAM - 12Vdc SOCKETS	HL	29 / 49
Date of modification	Modified by	Description	Project rev.	B		Boat model	Title	Loc	Sheet

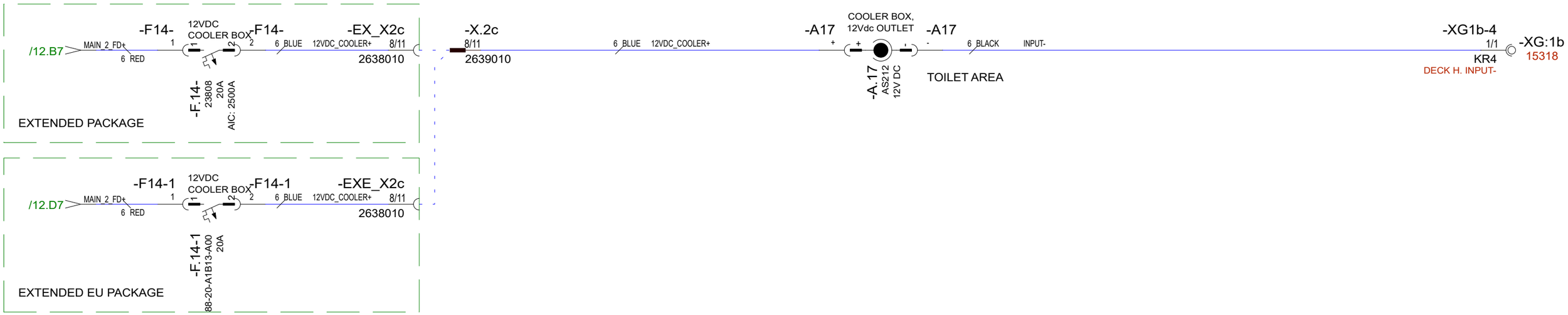

12VDC

02.09.2022	TT	B7: NOT MODIFIED	Date	9.6.2020
1.3.2024	PF	B8: 2005068; NOT MODIFIED	Drawing by	TuM
26.10.2021	VV	B6: NOT MODIFIED.	Sheet rev.	8
Date of modification	Modified by	Description	Project rev.	B

This document and all the information contained in it is proprietary and confidential information of Axopar Boats Oy. Neither this document nor any of the information contained herein may be reproduced, disclosed to others or used in any purpose other then for the prpose it has been provided without theprior writen permission of Axopar Boats Oy

Axopar Boat	Sub-product code	Product code	Project ID
22 Boat model	DIAGRAM - 12Vdc SOCKETS Title	HL Loc	30 / 49 Sheet

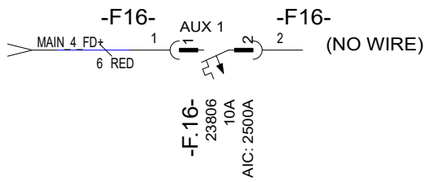

EXTENDED PACKAGE

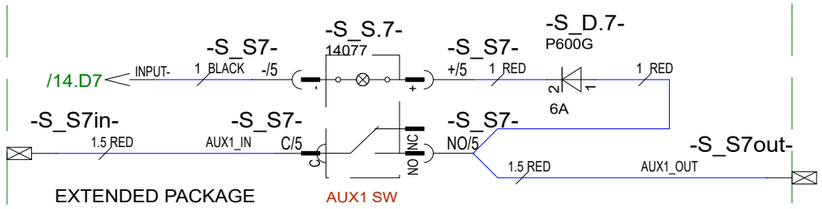

EXTENDED PACKAGE

AUX1 SW

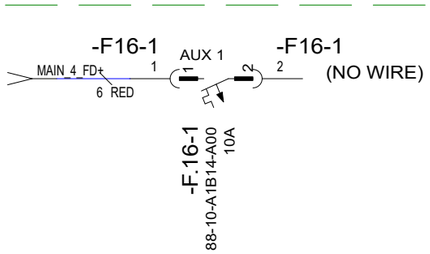

EXTENDED EU PACKAGE

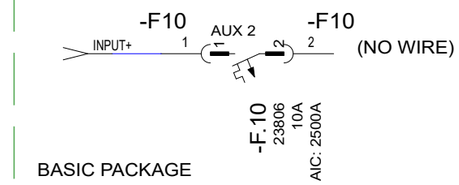

BASIC PACKAGE

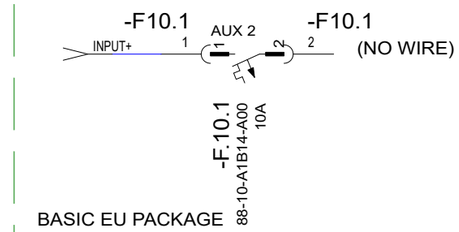

BASIC EU PACKAGE

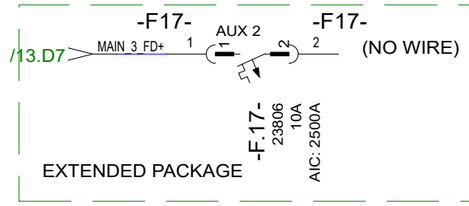

EXTENDED PACKAGE

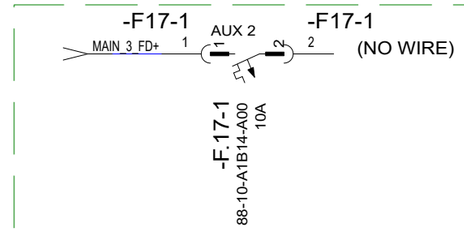

EXTENDED EU PACKAGE

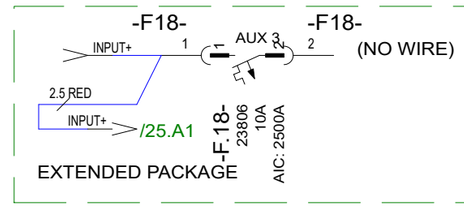

EXTENDED PACKAGE

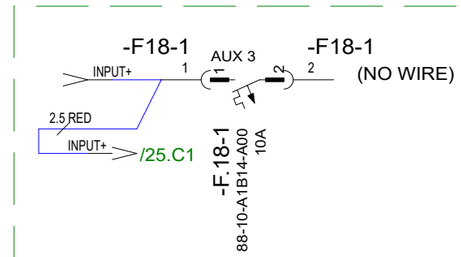

EXTENDED EU PACKAGE

12VDC

02.09.2022	TT	B7: NOT MODIFIED	Date	10.6.2020	This document and all the information contained in it is proprietary and confidential information of Axopar Boats Oy. Neither this document nor any of the information contained herein may be reproduced, disclosed to others or used in any purpose other then for the prpose it has been provided without theprior writen permission of Axopar Boats Oy	Axopar			
1.3.2024	PF	B8: 2005068; NOT MODIFIED	Drawing by	TuM		Boat	Sub-product code	Product code	Project ID
26.10.2021	VV	B6: NOT MODIFIED.	Sheet rev.	8	AXOPAR / BRABUS MARINE	22	DIAGRAM - AUX	HL	31/ 49
Date of modification	Modified by	Description	Project rev.	B		Boat model	Title	Loc	Sheet

HARNESS GENERAL LAYOUT

NOTICE!
VERIFY THAT ALL CABLES HAVE MARKINGS
SHOWN IN EXAMPLE BELOW.

EXEMPTION:
ALL <500mm WIRES AND BLACK WIRES
THIS MARKING IS NOT NEEDED.

MARKING

R2 ISO 6722 100V AWG16 +100 C

CABLE

EXAMPLE: RED 1,5mm2 WIRE MARKINGS.

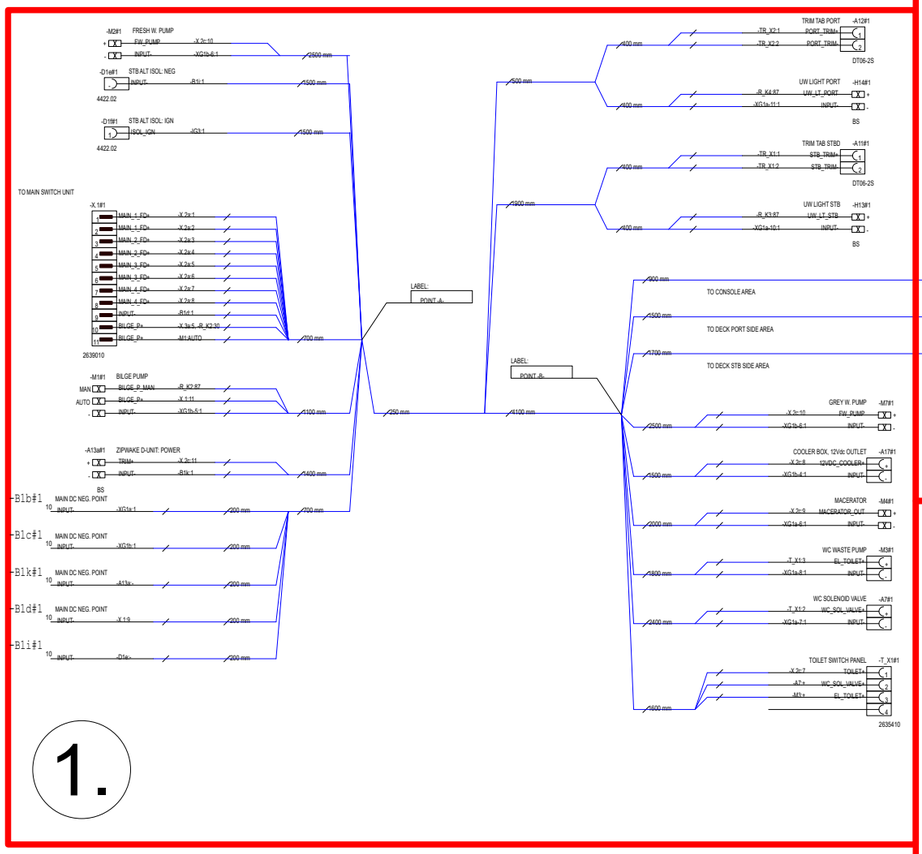

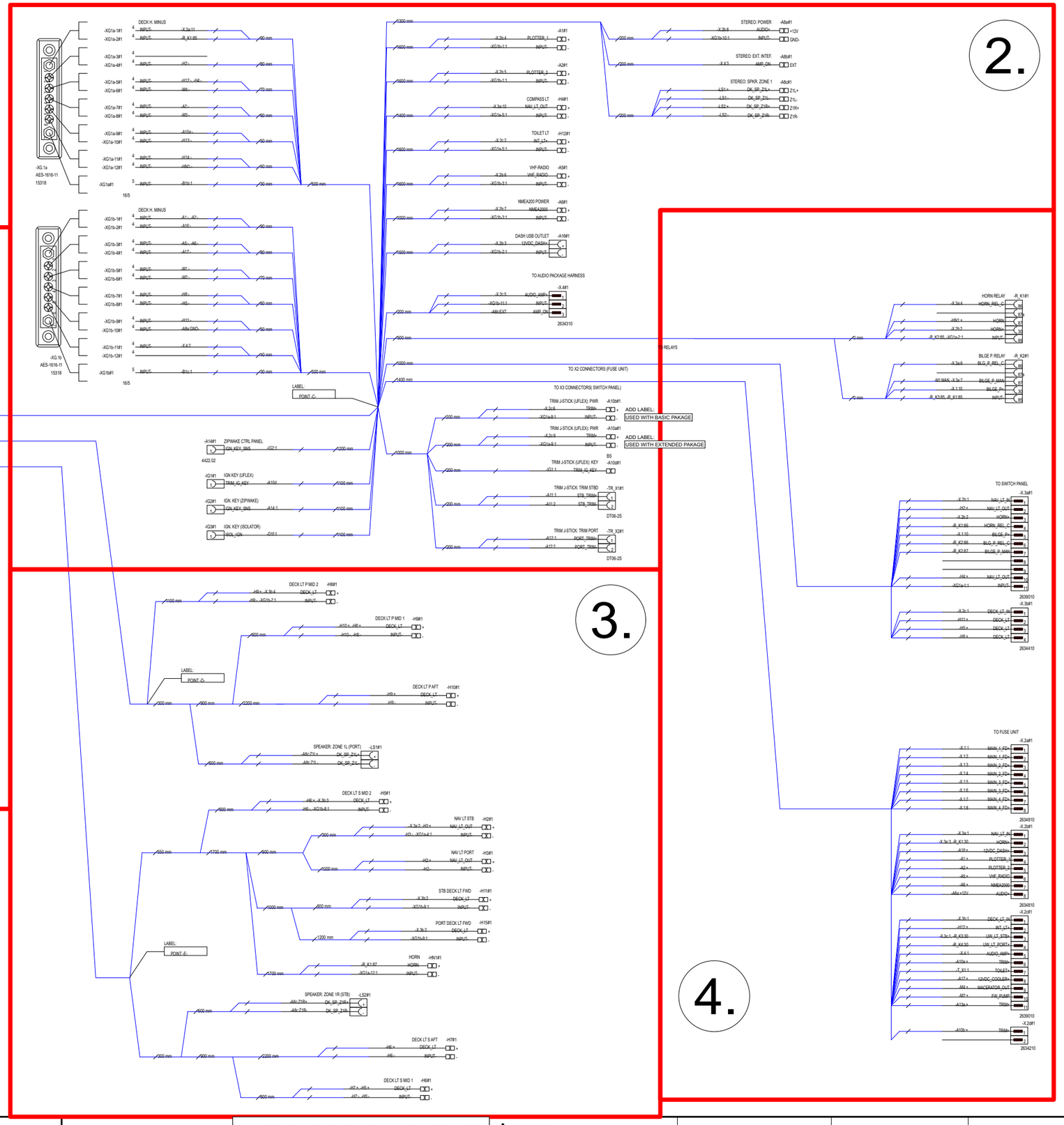

NOTICE!
THIS PAGE SHOWS ONLY GENERAL LAYOUT OF HARNESS.
MORE DETAILED DRAWINGS ARE SEEN IN FOLLOWED PAGES.

NUMBER INSIDE CIRCLE, FOR IN AREA SHOWS PAGE WHERE ACTUAL DRAWING INCLUDES.

FOR EXAMPLE:

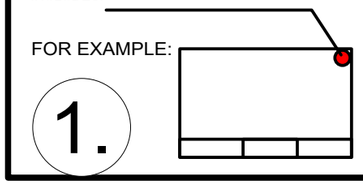

Date of modification	Modified by	Description
23.8.2021	PN	B4: ADDED -X.2c, -A10a2, -XG1b-12
02.09.2022	TT	B5: -T_X1, -TR_X1, -TR_X2 CONNECTORS CHANGED
1.3.2024	PF	B6: 2005068; R_K3 & X.3c added, bilge pump wiring changed

Date	2.7.2020
Drawing by	TuM
Sheet rev.	6
Project rev.	B

This document and all the information contained in it is proprietary and confidential information of Axopar Boats Oy. Neither this document nor any of the information contained herein may be reproduced, disclosed to others or used in any purpose other then for the prpose it has been provided without theprior writen permission of Axopar Boats Oy

AXOPAR BRABUS MARINE

Axopar			
Boat	Sub-product code	32624 Product code	Project ID
22	DECK HARNESS	HL	32 / 49
Boat model	Title	Loc	Sheet

1.

-M2#1 FRESH W. PUMP
+ FW_PUMP -X.2c:10 2.5 RED
- INPUT- -XG1b-6:1 2.5 BLACK
2500 mm

-D1e#1 STB ALT ISOL: NEG
INPUT- -B1i:1 2.5 BLACK
4422.02
1500 mm

-D1f#1 STB ALT ISOL: IGN
ISOL_IGN -IG3:1 2.5 RED
4422.02
1500 mm

LABEL:
NOTICE!
Connect ig-PIN only if self excitation is needed through isolator.
Otherwise do not connect.

-X.1#1
TO MAIN SWITCH UNIT

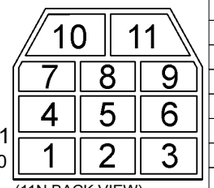

-X.1#1
2639010
(11N BACK VIEW)

1	MAIN_1_FD+	-X.2a:1	6 RED	
2	MAIN_1_FD+	-X.2a:2	6 RED	
3	MAIN_2_FD+	-X.2a:3	6 RED	
4	MAIN_2_FD+	-X.2a:4	6 RED	
5	MAIN_3_FD+	-X.2a:5	6 RED	
6	MAIN_3_FD+	-X.2a:6	6 RED	
7				
8				
9	INPUT-	-B1d:1	6 BLACK	
10	BILGE_P+	-R_K2:30, -M6:AUTO	4 RED	
11	BILGE_P+	-M1:AUTO, -R_K3:30	4 RED	

2639010
700 mm

LABEL:
POINT -A-

-M1#1 BILGE PUMP
MAN BILGE_P_MAN -R_K3:87 4 RED
AUTO BILGE_P+ -X.1:11 4 RED
- INPUT- -B1m:1 4 BLACK
1100 mm

-H1#1 ANCHOR LT
+ ANCH_LT_OUT -X.3a:8 1.5 BLUE
- INPUT- -XG1b-11:1 1.5 BLACK
1000 mm

-B1b#1 MAIN DC NEG. POINT
10 INPUT- -XG1a:1 16 BLACK 200 mm
16/10

-B1c#1 MAIN DC NEG. POINT
10 INPUT- -XG1b:1 16 BLACK 200 mm
16/10

-B1d#1 MAIN DC NEG. POINT
10 INPUT- -X.1:9 6 BLACK 200 mm
10024HQ

-B1i#1 MAIN DC NEG. POINT
10 INPUT- -D1e:- 2.5 BLACK 200 mm
ERF2-10

-B1m#1 MAIN DC NEG. POINT
10 INPUT- -M1:- 4 BLACK 200 mm
ERF5.5-10

700 mm

250 mm

2300 mm
2.5 RED -TR_X1 STB_TRIM+ 1
2.5 BLACK -TR_X1 STB_TRIM- 2
TRIM TAB STBD -A11#1
DT06-2S

-A11#1
DT06-2S
10930002
+WEDGELOCK: W2S
10930102

900 mm
2.5 RED -TR_X2 PORT_TRIM+ 1
2.5 BLACK -TR_X2 PORT_TRIM- 2
TRIM TAB PORT -A12#1
DT06-2S

-A12#1
DT06-2S
10930002
+WEDGELOCK: W2S
10930102

NOTICE! CABLES WITH STICKER
FOR EXAMPLE
POINT -A-

DELIVERED SEPARATELY

-A.11a & -A.12a
2 PCS DT04-2P
16461
+ 2PCS WEDGELOCK: W2P
16467

Pack the terminal frames and locking parts in a small bag and attach it to the wiring to the correct connector.

LABEL:
POINT -B-

4100 mm

900 mm — TO CONSOLE AREA — /34.E2

1500 mm — TO DECK PORT SIDE AREA — /35.B1

1700 mm — TO DECK STB SIDE AREA — /35.E1

1000 mm
BILGE PUMP -M6#1
4 BLACK -XG1b-5:1 INPUT- -
4 RED -X.1:10 BILGE_P+ AUTO
4 RED -R_K2:87 BILGE_P_MAN MAN

1500 mm
HORN -HN1#1
2.5 BROWN -R_K1:87 HORN +
2.5 BLACK -XG1a-12:1 INPUT- -
BS

1500 mm
GREY W. PUMP -M7#1
2.5 RED -X.2c:10 FW_PUMP +
2.5 BLACK -XG1b-6:1 INPUT- -

-A.17#1
AS212

1500 mm
COOLER BOX, 12Vdc OUTLET -A17#1
6 BLUE -X.2c:8 12VDC_COOLER+ +
6 BLACK -XG1b-4:1 INPUT- -

2000 mm
MACERATOR -M4#1
6 RED -X.2c:9 MACERATOR_OUT +
6 BLACK -XG1a-6:1 INPUT- -

500 mm
WC WASTE PUMP -M3#1
6 RED -T_X1 EL_TOILET+ +
6 BLACK -XG1a-8:1 INPUT- -

500 mm
WC SOLENOID VALVE -A7#1
6 RED -T_X1 WC_SOL_VALVE+ +
6 BLACK -XG1a-7:1 INPUT- -

500 mm
TOILET SWITCH PANEL -T_X1#1
6 RED -X.2c:7 TOILET+
6 RED -A7:+ WC_SOL_VALVE+
6 RED -M3:+ EL_TOILET+

NOTICE!
BATTERY CABLES NEED TO ADD MARKINGS SHOWN IN EXAMPLE BELOW.
EXEMPTION:
ALL BLACK WIRES
THIS MARKING IS NOT NEEDED.

R2 ISO 6722 100V AWG6 +100 C
MARKING
CABLE

EXAMPLE: RED 16mm2 WIRE MARKINGS.

MARKING SHOWN ABOVE ONLY TO CABLES LISTED BELOW.

LOOK FOR EQUIVALENT AWG SIZE FOR mm2 AND ADD THIS TO CABLE MARKINGS.

FOR EXAMPLE:
CABLE SIZE IS 25mm2 --> MARKING AWG3.

EQUIVALENCY:

mm2		AWG
10 mm2	=	AWG8
16 mm2	=	AWG6
25 mm2	=	AWG3
35 mm2	=	AWG2

Date of modification	Modified by	Description
23.8.2021	PN	B4: ADDED -X.2c, -A10a2, -XG1b-12
02.09.2022	TT	B5: -T_X1, -TR_X1, -TR_X2 CONNECTORS CHANGED
1.3.2024	PF	B6: 2005068; R_K3 & X.3c added, bilge pump wiring changed

Date	1.7.2020
Drawing by	TuM
Sheet rev.	6
Project rev.	B

This document and all the information contained in it is proprietary and confidential information of Axopar Boats Oy. Neither this document nor any of the information contained herein may be reproduced, disclosed to others or used in any purpose other then for the prpose it has been provided without theprior writen permission of Axopar Boats Oy

AXOPAR BRABUS MARINE

Axopar			
Boat	Sub-product code	32624 Product code	Project ID
22	DECK HARNESS	HL	
Boat model	Title	Loc	33 / 49 Sheet

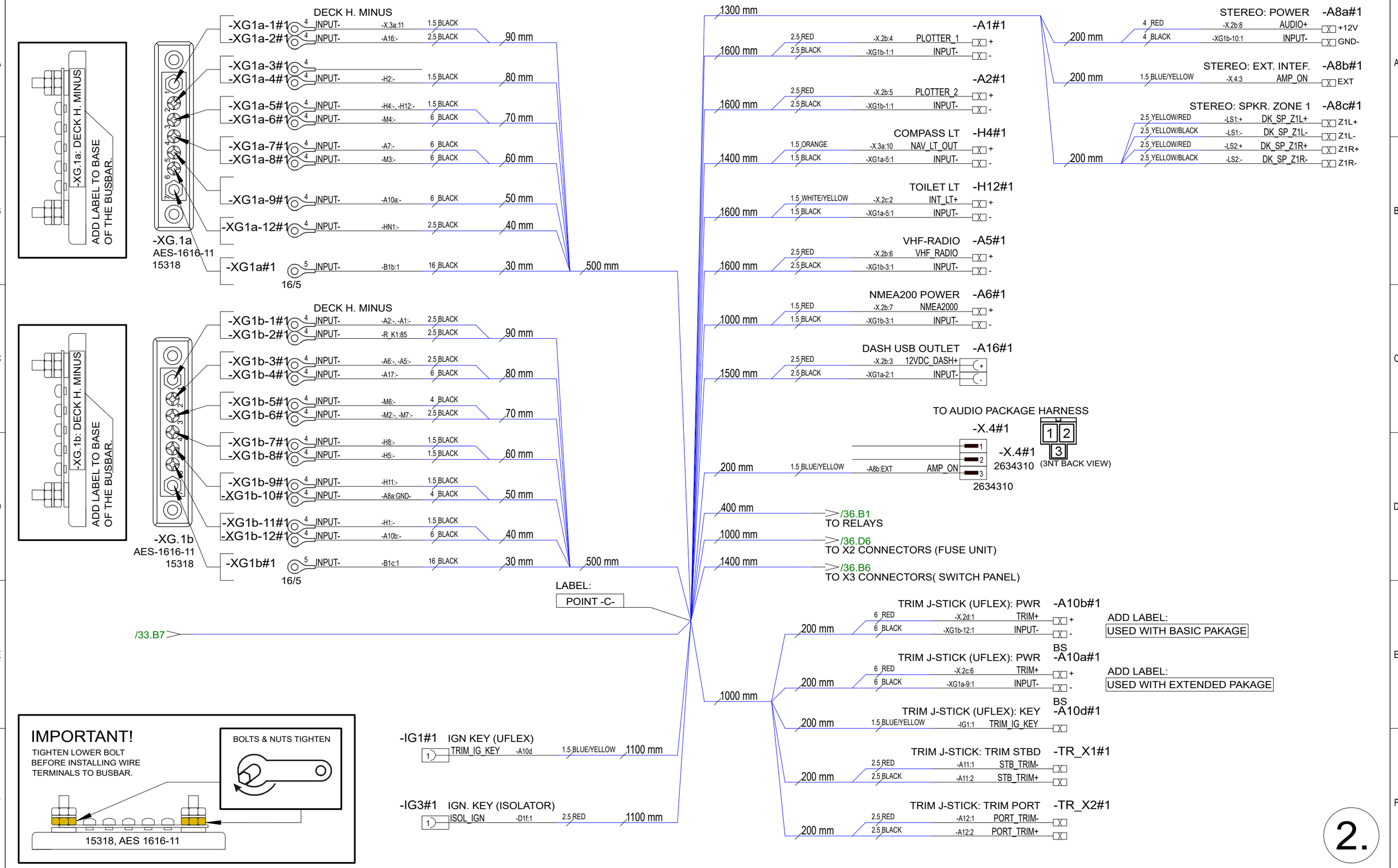

23.8.2021	PN	B4: ADDED -X.2c, -A10a2, -XG1b-12	Date	1.7.2020	Axopar			
02.09.2022	TT	B5: -T_X1, -TR_X1, -TR_X2 CONNECTORS CHANGED	Drawing by	TuM	Boat	Sub-product code	32624 Product code	Project ID
1.3.2024	PF	B6: 2005068; R_K3 & X.3c added, bilge pump wiring changed	Sheet rev.	6	22	DECK HARNESS	HL	34 / 49
Date of modification	Modified by	Description	Project rev.	B	Boat model	Title	Loc	Sheet

This document and all the information contained in it is proprietary and confidential information of Axopar Boats Oy. Neither this document nor any of the information contained herein may be reproduced, disclosed to others or used in any purpose other then for the prpose it has been provided without theprior writen permission of Axopar Boats Oy

AXOPAR BRABUS MARINE

3.

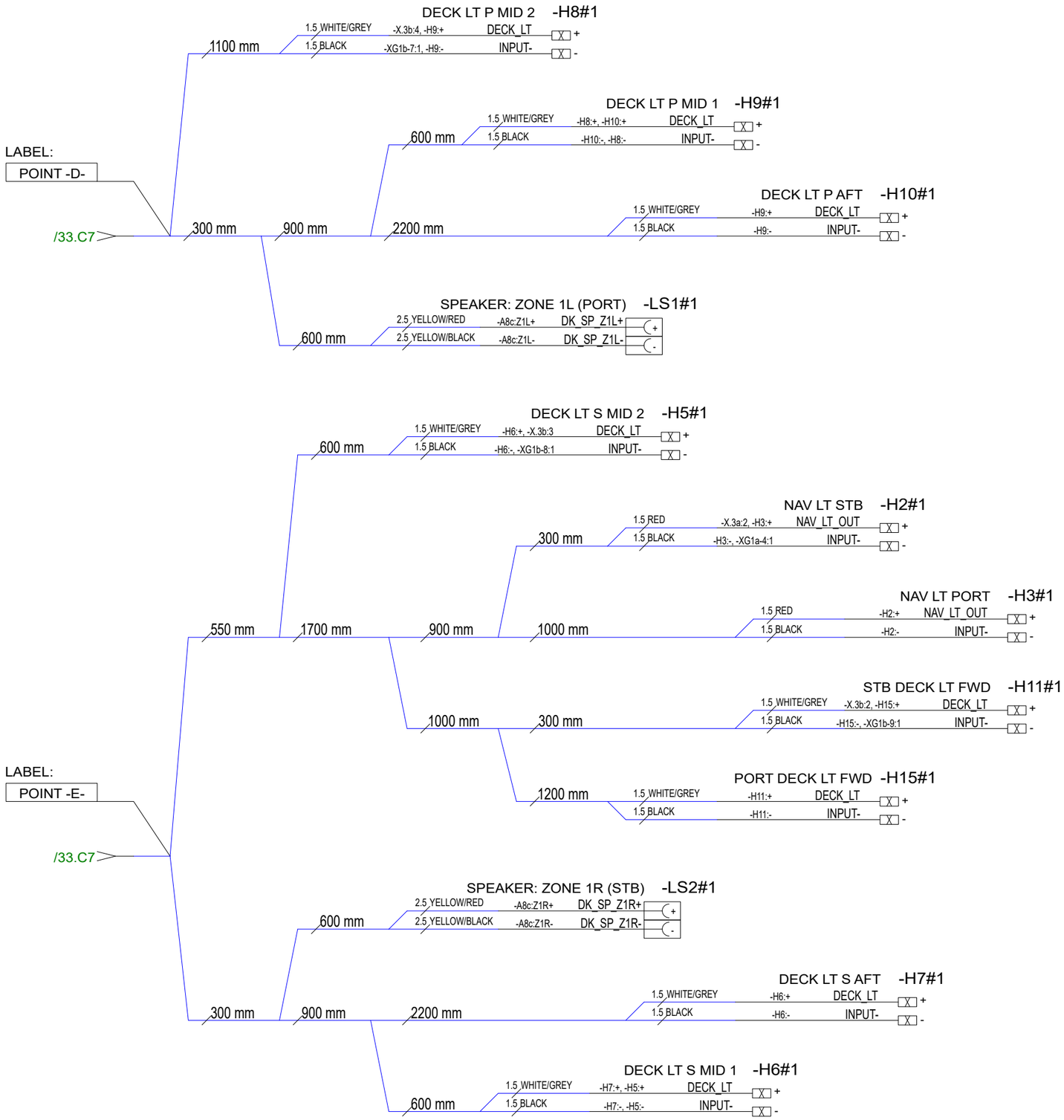

23.8.2021	PN	B4: ADDED -X.2c, -A10a2, -XG1b-12	Date	1.7.2020	This document and all the information contained in it is proprietary and confidential information of Axopar Boats Oy. Neither this document nor any of the information contained herein may be reproduced, disclosed to others or used in any purpose other then for the prpose it has been provided without theprior writen permission of Axopar Boats Oy	Axopar		
02.09.2022	TT	B5: -T_X1, -TR_X1, -TR_X2 CONNECTORS CHANGED	Drawing by	TuM		Boat	Sub-product code	32624 Product code	Project ID
1.3.2024	PF	B6: 2005068; R_K3 & X.3c added, bilge pump wiring changed	Sheet rev.	6	AXOPAR / BRABUS MARINE	22	DECK HARNESS	HL	35 / 49
Date of modification	Modified by	Description	Project rev.	B		Boat model	Title	Loc	Sheet

4.

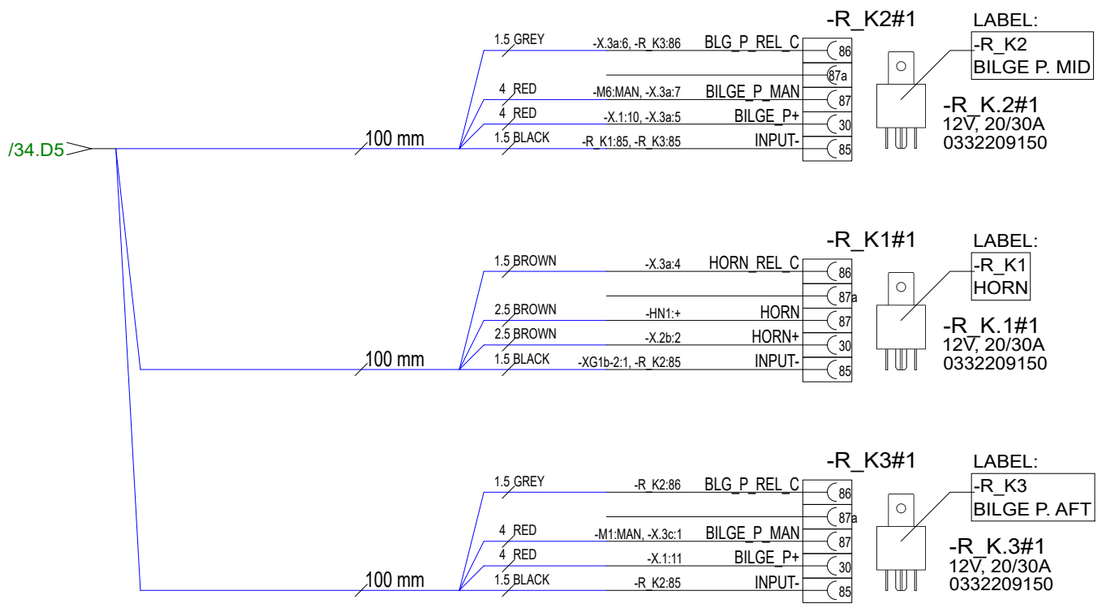

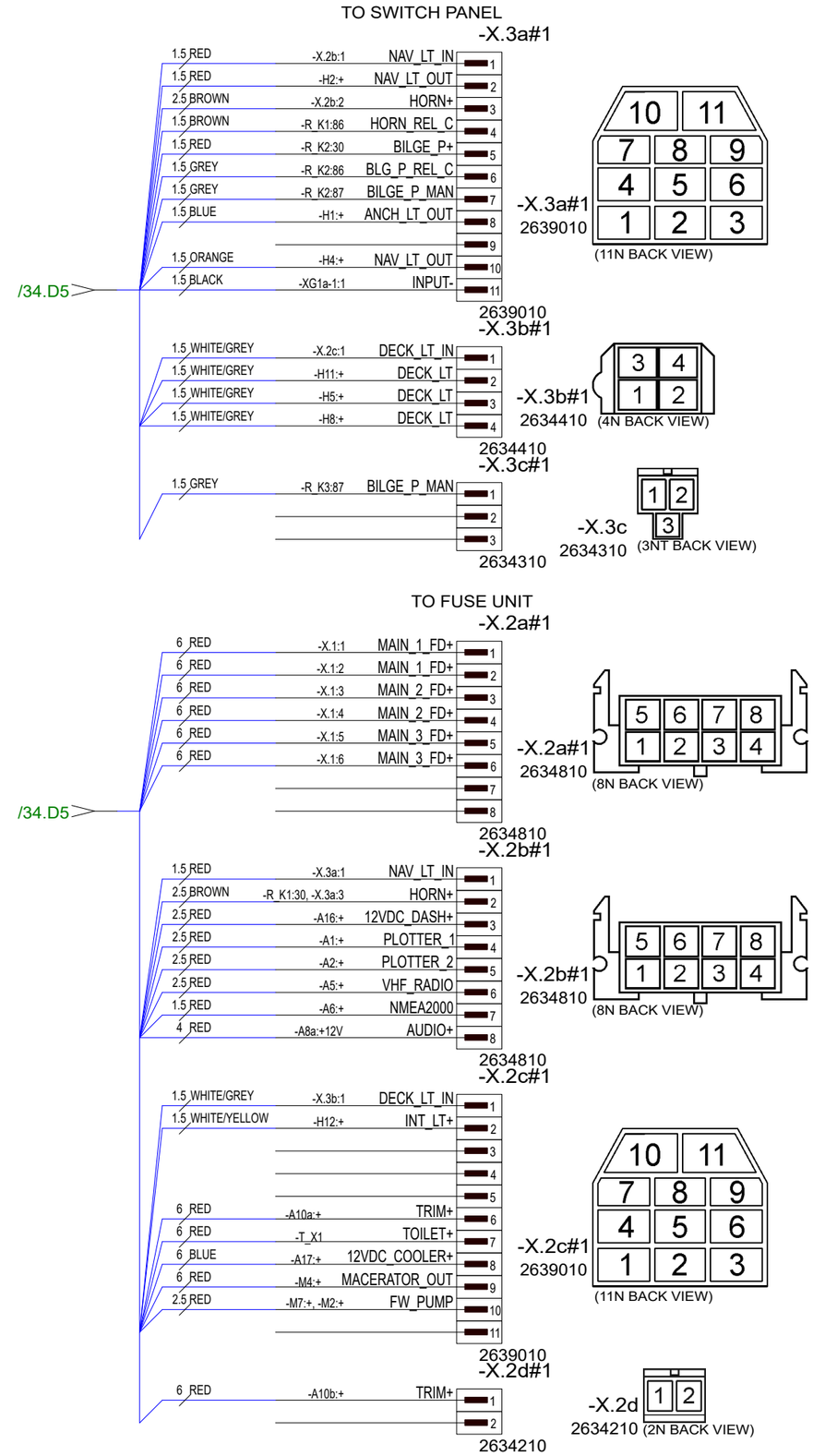

23.8.2021	PN	B4: ADDED -X.2c, -A10a2, -XG1b-12	Date	1.7.2020	This document and all the information contained in it is proprietary and confidential information of Axopar Boats Oy. Neither this document nor any of the information contained herein may be reproduced, disclosed to others or used in any purpose other then for the prpose it has been provided without theprior writen permission of Axopar Boats Oy	Axopar Boat	Sub-product code	32624 Product code	Project ID
02.09.2022	TT	B5: -T_X1, -TR_X1, -TR_X2 CONNECTORS CHANGED	Drawing by	TuM					
1.3.2024	PF	B6: 2005068; R_K3 & X.3c added, bilge pump wiring changed	Sheet rev.	6	AXOPAR / BRABUS MARINE	22 Boat model	DECK HARNESS Title	HL Loc	36 / 49 Sheet
Date of modification	Modified by	Description	Project rev.	B					

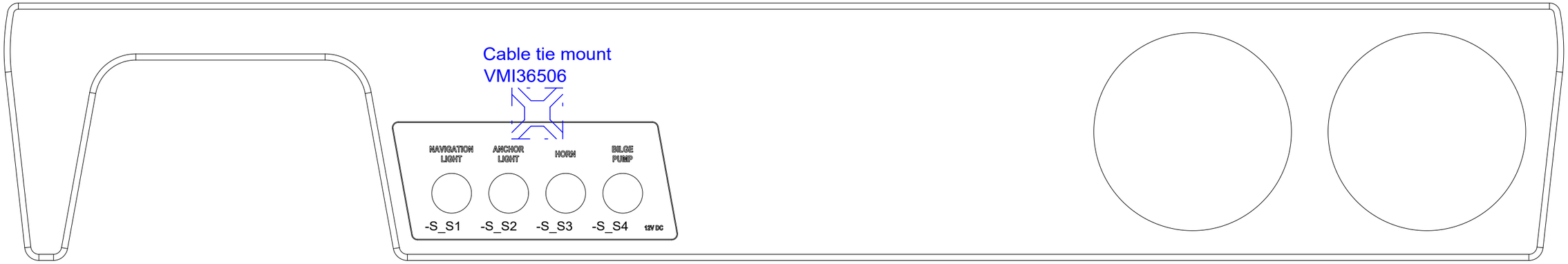

1. Install the Cable Tie Mount on the back of the panel, using double-sided tape attached. As in the picture. (Clean the panel surface first.)
2. Attach the harness to the mount with the cable tie.
3. Make sure that the wires coming from the switches are not tight!

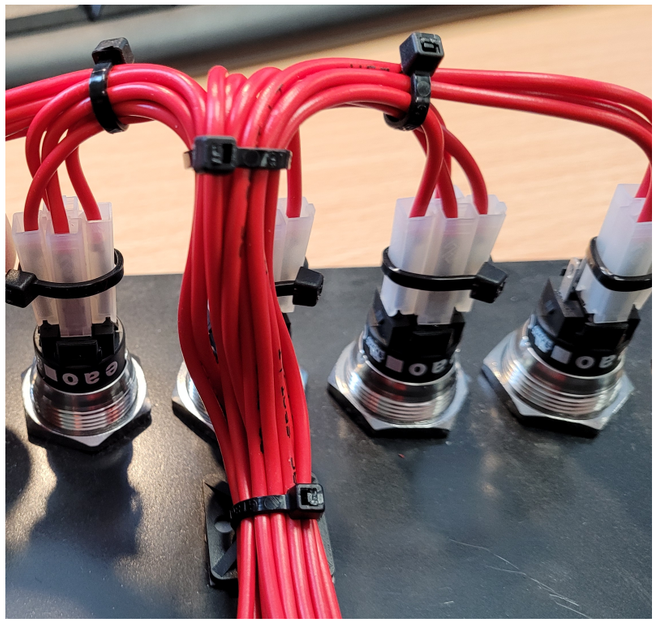

NOTICE!
VERIFY THAT ALL CABLES HAVE MARKINGS SHOWN IN EXAMPLE BELOW.
EXEMPTION:
ALL <500mm WIRES AND BLACK WIRES THIS MARKING IS NOT NEEDED.

R2 ISO 6722 100V AWG16 +100 C

MARKING
CABLE

EXAMPLE: RED 1,5mm2 WIRE MARKINGS.

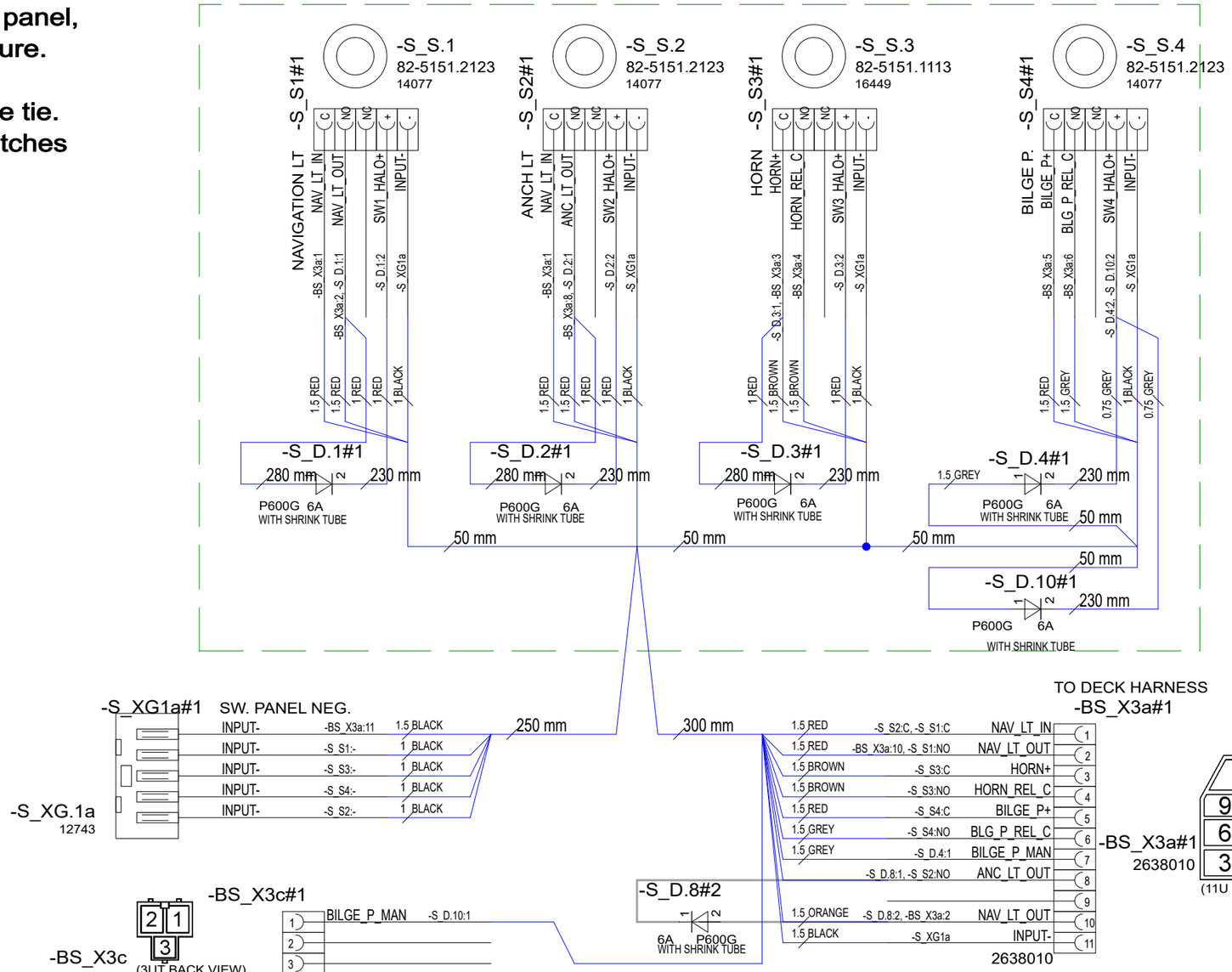

1.3.2024	PF	B4: 2005068; S_D.10 & BS_X3c added	Date	3.7.2020	This document and all the information contained in it is proprietary and confidential information of Axopar Boats Oy. Neither this document nor any of the information contained herein may be reproduced, disclosed to others or used in any purpose other then for the prpose it has been provided without theprior writen permission of Axopar Boats Oy	Axopar	SEE EXP VIEW	32625
22.12.2020	AR	B2: PANEL CHANGED, ANCHOR LT ADDED	Drawing by	TuM		Boat	Sub-product code	Product code / Project ID
24.5.2021	PN	B3: D.1-D.4 & D.8 ADDED, S_R.1-S_R.4 REMOVED	Sheet rev.	4	AXOPAR / BRABUS MARINE	22	SWITCH PANEL BASIC	HL
Date of modification	Modified by	Description	Project rev.	B		Boat model	Title	Loc / 37 / 49 Sheet

EXP VIEW

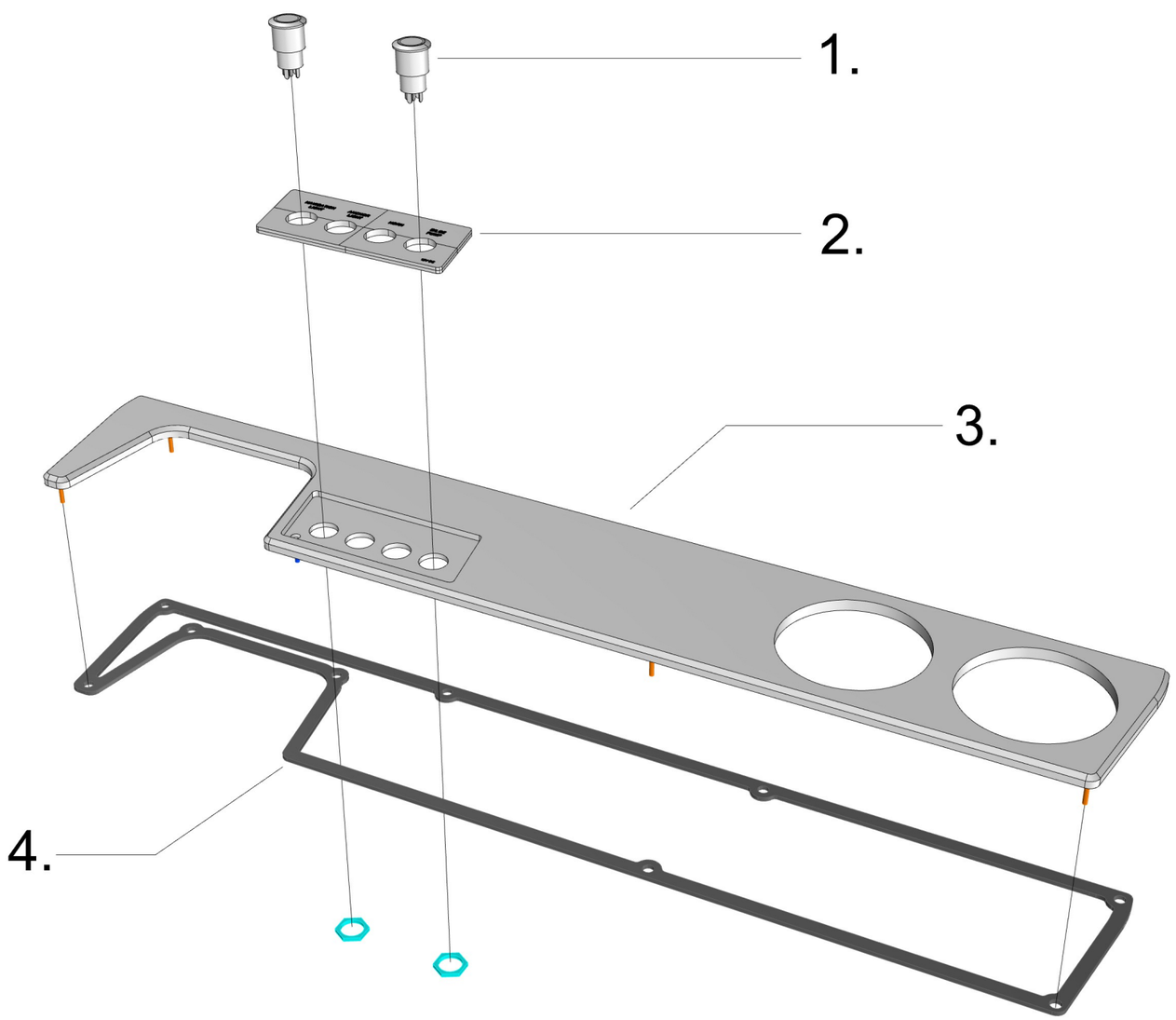

32625_AXOPAR_22_SWITCH_PANEL_BASIC

1. 4pcs SWITCH (AS IN DIAGRAM)

2. 1pc 32713_AXOPAR_22_SWITCH_PANEL_ACRYLIC_BASIC
ATTACH TO THE RECESS WITH 21119 MS-POLYMER BLACK GLUE AND APPLY APPROX 3mm WIDE SEAM AROUND AT BOTTOM OF RECESS.

3. 1pc 32712_AXOPAR_22_SWITCH_PANEL_BASE_BASIC

4. 1pc 32711_AXOPAR_22_SWITCH_PANEL_GASKET

JS / 22.6.2020

Date of modification	Modified by	Description
1.3.2024	PF	B4: 2005068; S_D.10 & BS_X3c added
22.12.2020	AR	B2: PANEL CHANGED, ANCHOR LT ADDED
24.5.2021	PN	B3: D.1-D.4 & D.8 ADDED, S_R.1-S_R.4 REMOVED

Date	3.7.2020
Drawing by	TuM
Sheet rev.	4
Project rev.	B

This document and all the information contained in it is proprietary and confidential information of Axopar Boats Oy. Neither this document nor any of the information contained herein may be reproduced, disclosed to others or used in any purpose other then for the prpose it has been provided without theprior writen permission of Axopar Boats Oy

AXOPAR BRABUS MARINE

Axopar Boat	SEE EXP VIEW Sub-product code	32625 Product code	Project ID
22 Boat model	SWITCH PANEL BASIC Title	HL Loc	38 / 49 Sheet

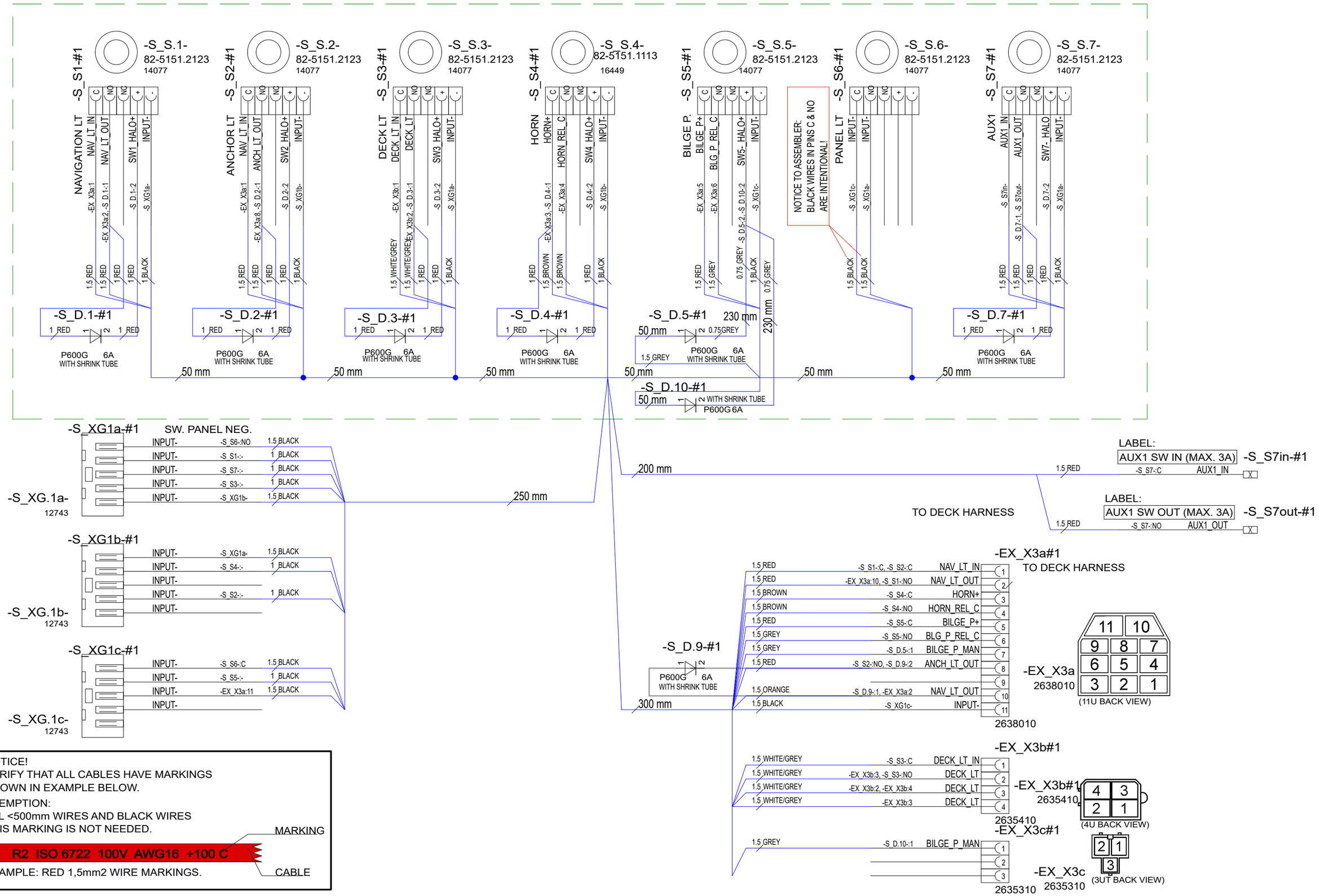

NOTICE!
VERIFY THAT ALL CABLES HAVE MARKINGS
SHOWN IN EXAMPLE BELOW.
EXEMPTION:
ALL <500mm WIRES AND BLACK WIRES
THIS MARKING IS NOT NEEDED.

R2 ISO 6722 100V AWG16 +100 C

MARKING

CABLE

EXAMPLE: RED 1,5mm2 WIRE MARKINGS.

Date of modification	Modified by	Description
1.3.2024	PF	B4: 2005068; S_D.10- & EX_X3c added
22.12.2020	AR	B2: PANEL CHANGED, ANCHOR LT. ADDED
24.5.2021	PN	B3: D.1-D.5,D.7 & D.9 ADDED, S_R.1-S_R.5&R_S.7, S_XG1c, REMOVED

Date	3.7.2020
Drawing by	TuM
Sheet rev.	4
Project rev.	B

This document and all the information contained in it is proprietary and confidential information of Axopar Boats Oy. Neither this document nor any of the information contained herein may be reproduced, disclosed to others or used in any purpose other then for the prpose it has been provided without theprior writen permission of Axopar Boats Oy

AXOPAR BRABUS MARINE

Axopar Boat	SEE EXP VIEW Sub-product code	32626 Product code	Project ID
22 Boat model	SWITCH PANEL EXTENDED Title	HL Loc	39 / 49 Sheet

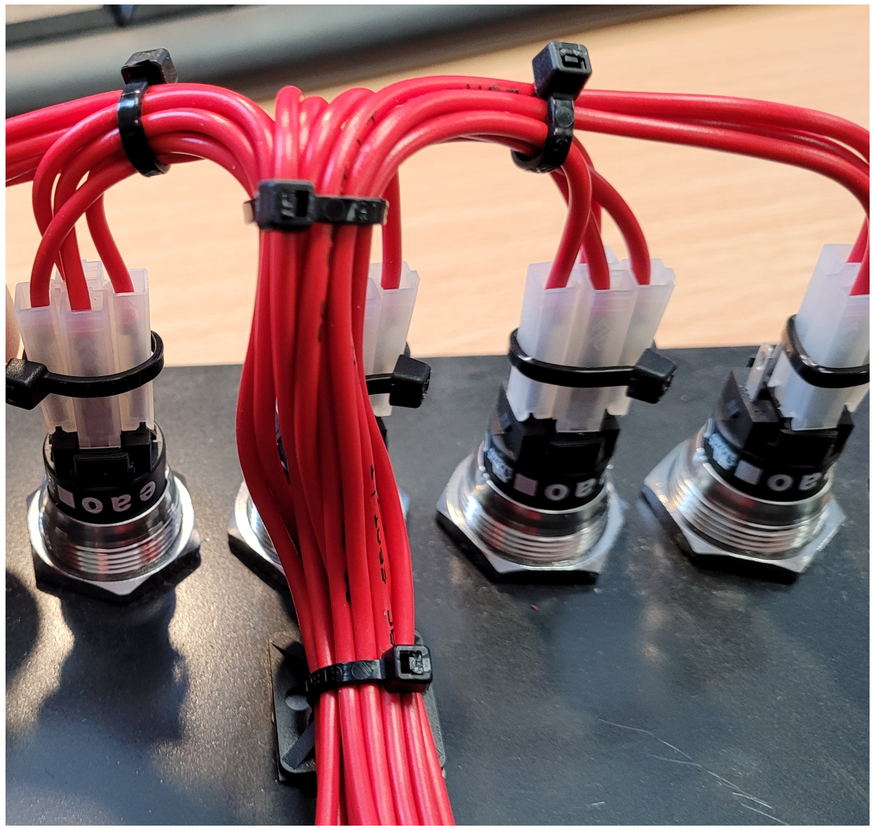

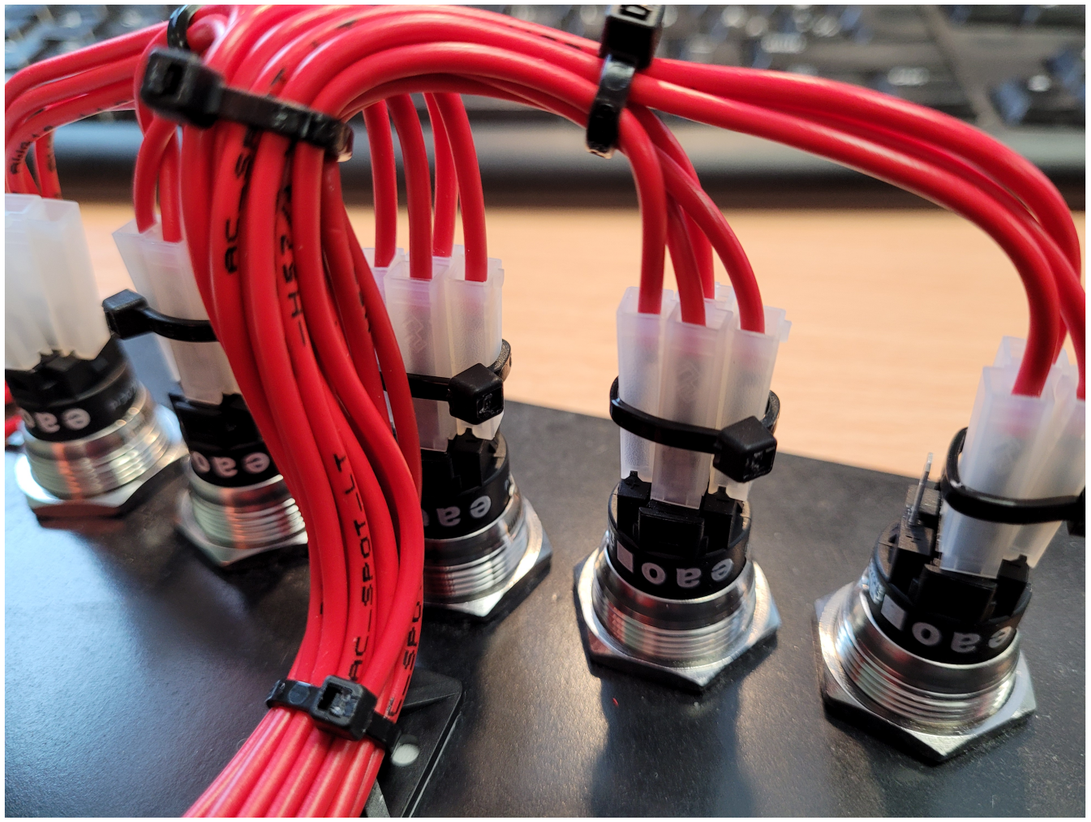

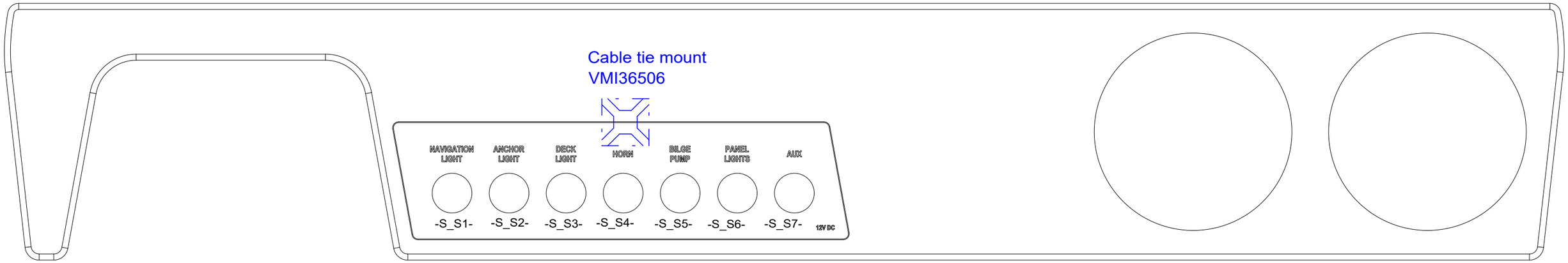

1. Install the Cable Tie Mount on the back of the panel, using double-sided tape attached. As in the pictures. (Clean the panel surface first.)
2. Attach the harness to the mount with the cable tie.
3. Make sure that the wires coming from the switches are not tight!

Date of modification	Modified by	Description
1.3.2024	PF	B4: 2005068; S_D.10- & EX_X3c added
22.12.2020	AR	B2: PANEL CHANGED, ANCHOR LT. ADDED
24.5.2021	PN	B3: D.1-D.5,D.7 & D.9 ADDED, S_R.1-S_R.5&R_S.7, S_XG1c, REMOVED

Date	3.7.2020
Drawing by	TuM
Sheet rev.	4
Project rev.	B

This document and all the information contained in it is proprietary and confidential information of Axopar Boats Oy. Neither this document nor any of the information contained herein may be reproduced, disclosed to others or used in any purpose other then for the prpose it has been provided without theprior writen permission of Axopar Boats Oy

AXOPAR BRABUS MARINE

Axopar Boat	SEE EXP VIEW Sub-product code	32626 Product code	Project ID
22 Boat model	SWITCH PANEL EXTENDED Title	HL Loc	40 / 49 Sheet

EXP VIEW

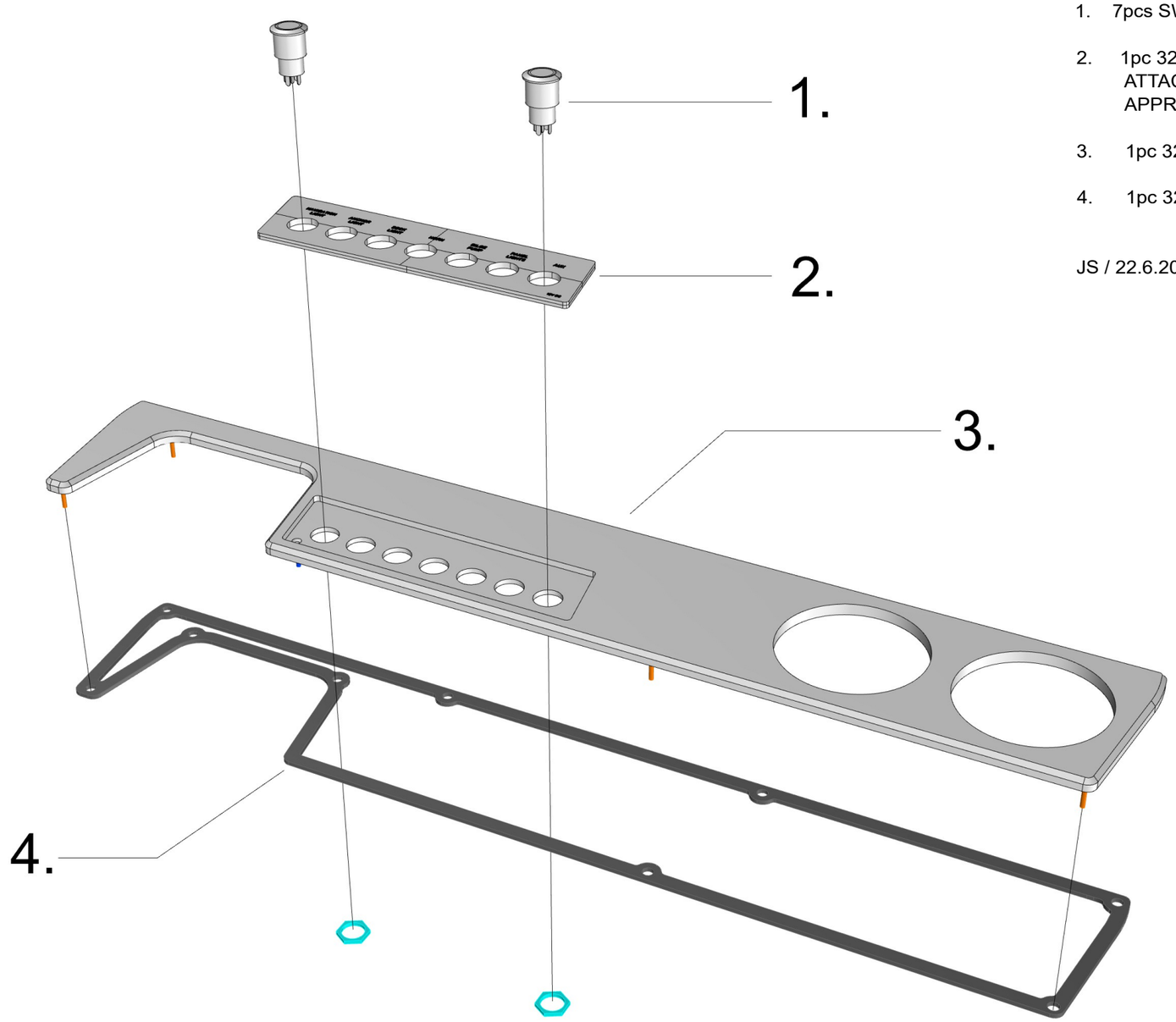

32626_AXOPAR_22_SWITCH_PANEL_EXTENDED

1. 7pcs SWITCH (AS IN DIAGRAM)

2. 1pc 32710_AXOPAR_22_SWITCH_PANEL_ACRYLIC_EXTENDED
ATTACH TO THE RECESS WITH 21119 MS-POLYMER BLACK GLUE AND APPLY APPROX 3mm WIDE SEAM AROUND AT BOTTOM OF RECESS.

3. 1pc 32709_AXOPAR_22_SWITCH_PANEL_BASE_EXTENDED

4. 1pc 32711_AXOPAR_22_SWITCH_PANEL_GASKET

JS / 22.6.2020

Date of modification	Modified by	Description
1.3.2024	PF	B4: 2005068; S_D.10- & EX_X3c added
22.12.2020	AR	B2: PANEL CHANGED, ANCHOR LT. ADDED
24.5.2021	PN	B3: D.1-D.5,D.7 & D.9 ADDED, S_R.1-S_R.5&R_S.7, S_XG1c, REMOVED

Date	3.7.2020
Drawing by	TuM
Sheet rev.	4
Project rev.	B

This document and all the information contained in it is proprietary and confidential information of Axopar Boats Oy. Neither this document nor any of the information contained herein may be reproduced, disclosed to others or used in any purpose other then for the prpose it has been provided without theprior writen permission of Axopar Boats Oy

Axopar Boat	SEE EXP VIEW Sub-product code	32626 Product code	Project ID
22 Boat model	SWITCH PANEL EXTENDED Title	HL Loc	41/ 49 Sheet

3760 COPPER BAR ANGLE TYPE
M10x30 BOLT
M10 NUT
M10 SPRING WASHER

NOTICE!

ADD LABELS TO BEHIND OF PANEL.

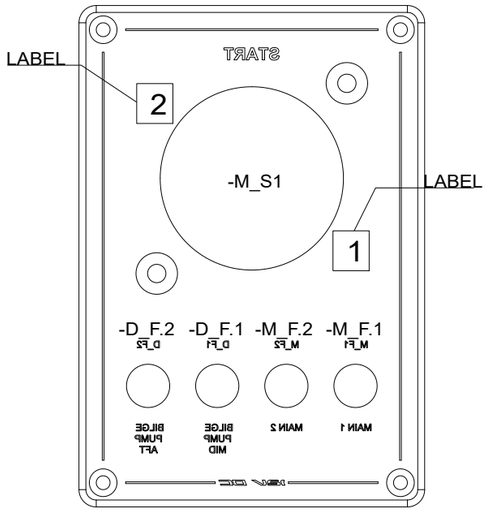

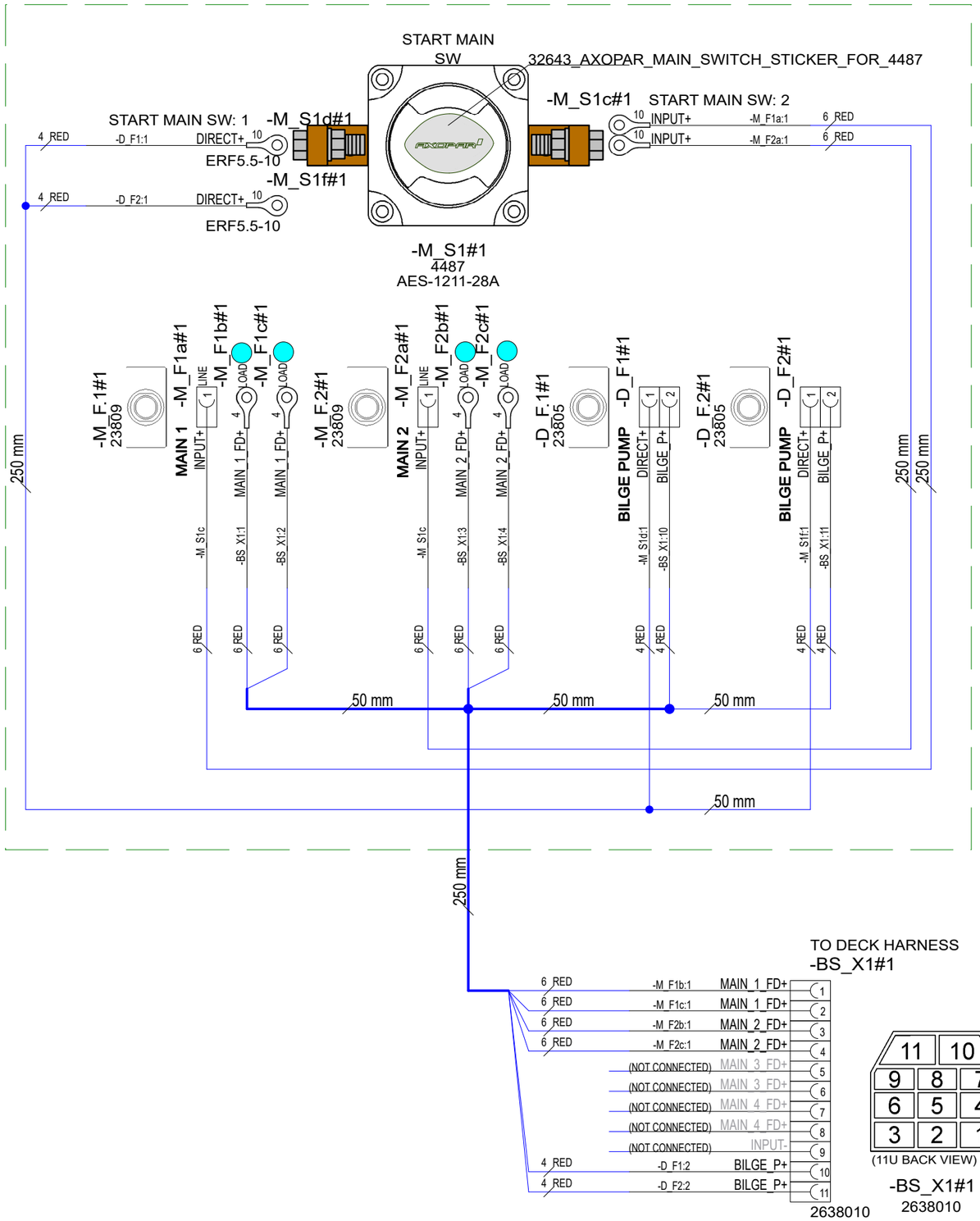

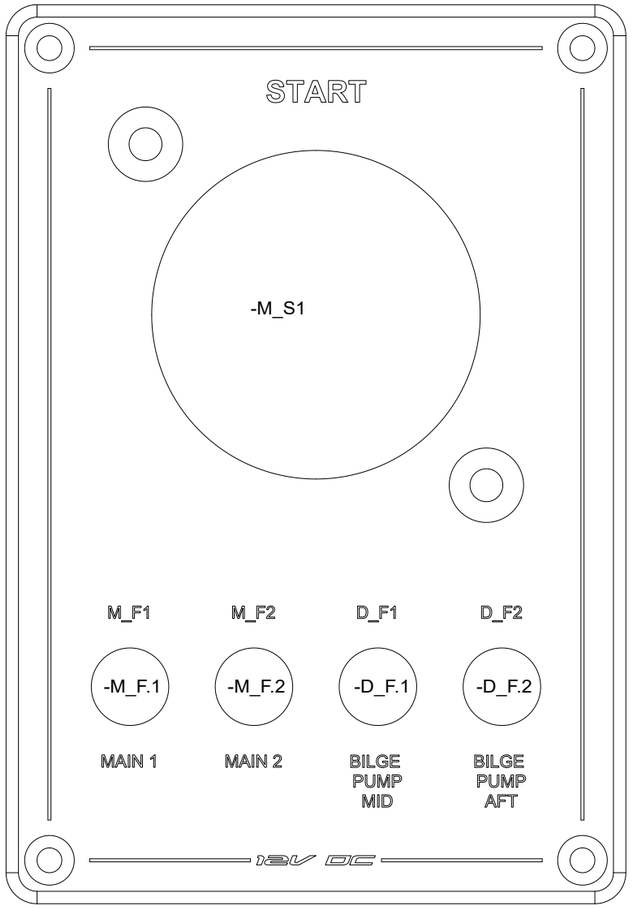

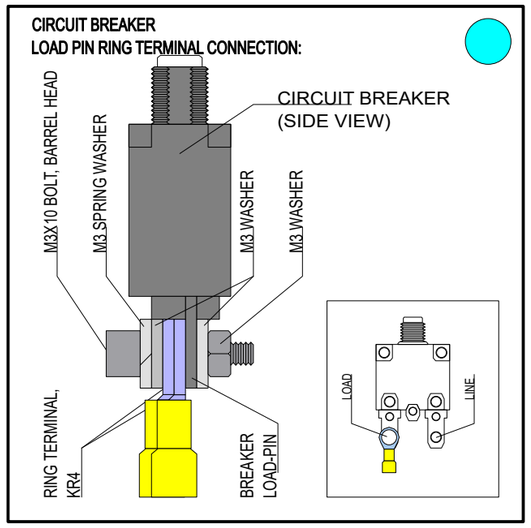

NOTICE!
VERIFY THAT ALL CABLES HAVE MARKINGS SHOWN IN EXAMPLE BELOW.
EXEMPTION:
ALL <500mm WIRES AND BLACK WIRES THIS MARKING IS NOT NEEDED.

MARKING

R2 ISO 6722 100V AWG16 +100 C

CABLE

EXAMPLE: RED 1,5mm2 WIRE MARKINGS.

4.7.2020	TuM	A1: INTRODUCED DRAWING.	Date	3.7.2020	This document and all the information contained in it is proprietary and confidential information of Axopar Boats Oy. Neither this document nor any of the information contained herein may be reproduced, disclosed to others or used in any purpose other then for the prpose it has been provided without theprior writen permission of Axopar Boats Oy	Axopar	32689	32627
22.12.2020	AR	B1: NOT MODIFIED	Drawing by	TuM		Boat	Sub-product code	Product code / Project ID
1.3.3024	PF	B2: 2005068; D_F2 added	Sheet rev.	2	AXOPAR / BRABUS MARINE	22	MAIN SWITCH UNIT BASIC	HL
Date of modification	Modified by	Description	Project rev.	B		Boat model	Title	Loc / 42 / 49 Sheet

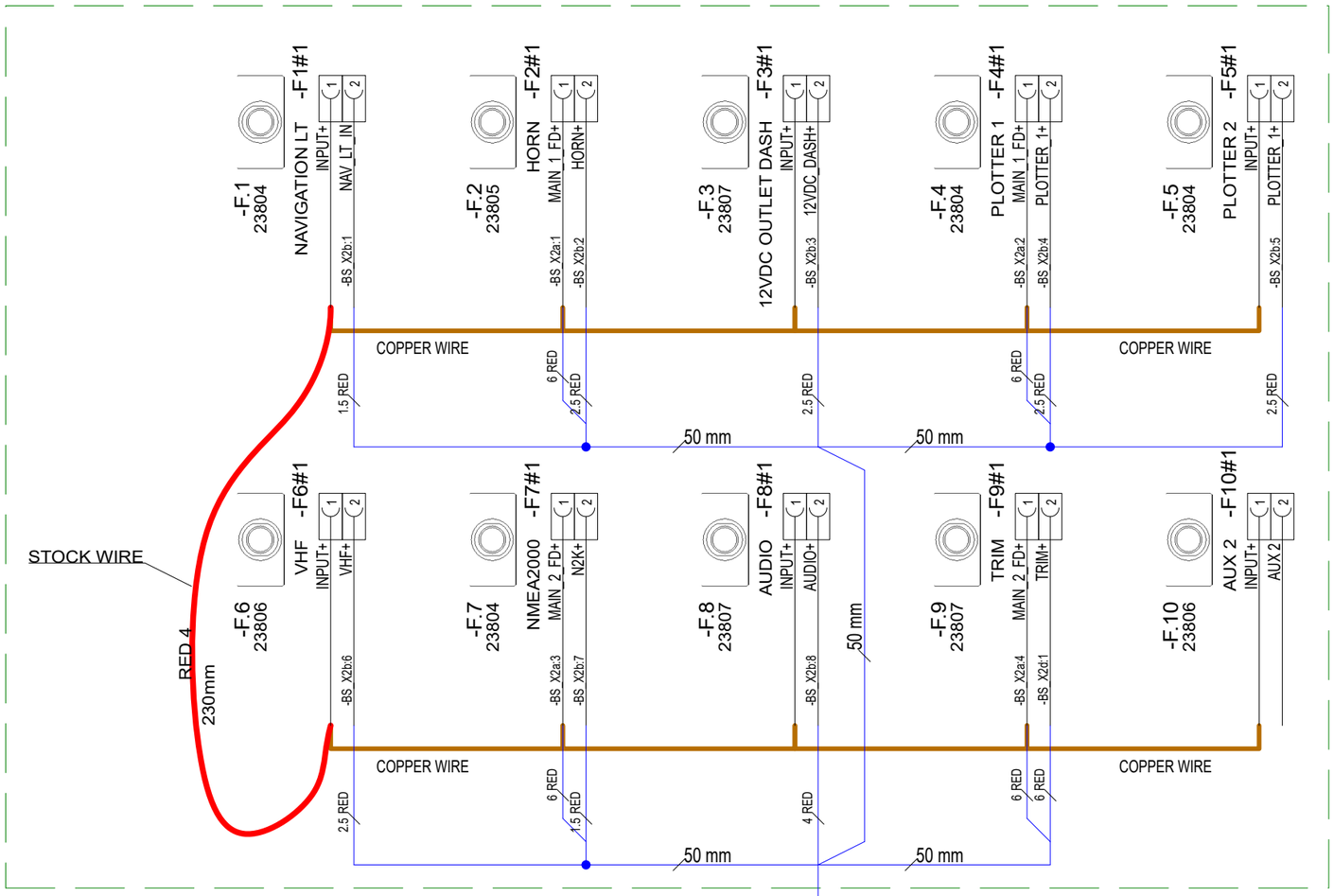

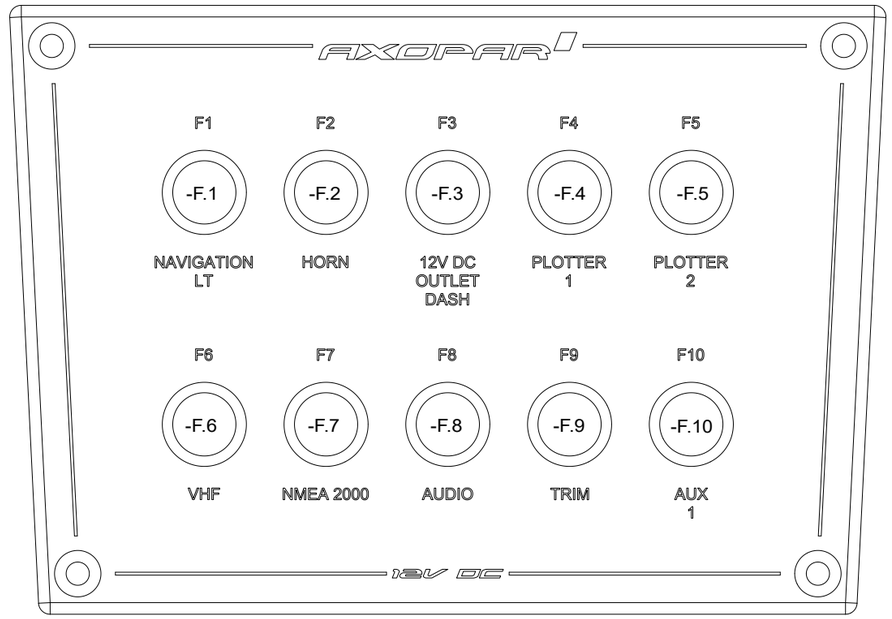

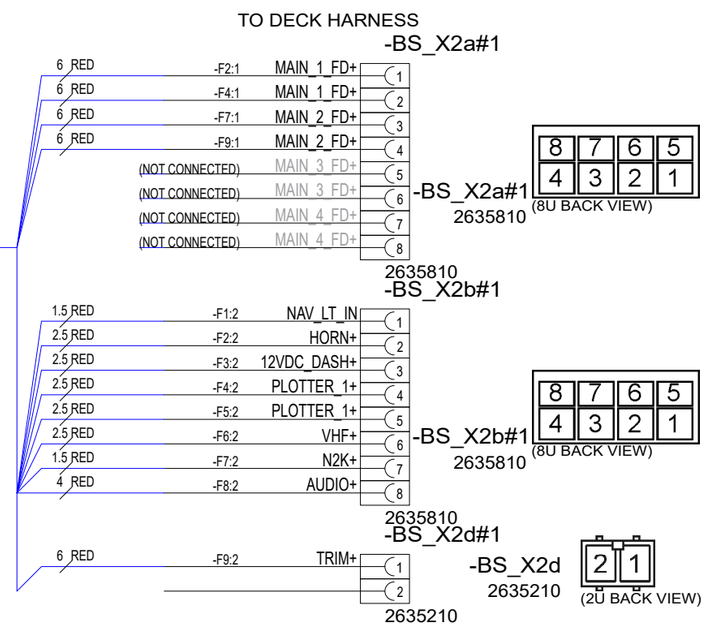

NOTICE!
VERIFY THAT ALL CABLES HAVE MARKINGS
SHOWN IN EXAMPLE BELOW.

EXEMPTION:
ALL <500mm WIRES AND BLACK WIRES
THIS MARKING IS NOT NEEDED.

MARKING

R2 ISO 6722 100V AWG16 +100 C

CABLE

EXAMPLE: RED 1,5mm2 WIRE MARKINGS.

Date of modification	Modified by	Description
3.7.2020	TuM	A1: INTRODUCED DRAWING.
22.12.2020	AR	B1: NOT MODIFIED
23.8.2021	PN	B2: -F9.1 -> 15A, ADDED -BS_X2d

Date	3.7.2020
Drawing by	TuM
Sheet rev.	2
Project rev.	B

This document and all the information contained in it is proprietary and confidential information of Axopar Boats Oy. Neither this document nor any of the information contained herein may be reproduced, disclosed to others or used in any purpose other then for the prpose it has been provided without theprior writen permission of Axopar Boats Oy

AXOPAR BRABUS MARINE

Axopar Boat	32687 Sub-product code	32629 Product code	Project ID
22 Boat model	FUSE UNIT BASIC Title	HL Loc	43 / 49 Sheet

NOTICE!
VERIFY THAT ALL CABLES HAVE MARKINGS
SHOWN IN EXAMPLE BELOW.
EXEMPTION:
ALL <500mm WIRES AND BLACK WIRES
THIS MARKING IS NOT NEEDED.

MARKING

R2 ISO 6722 100V AWG16 +100 C

CABLE

EXAMPLE: RED 1,5mm2 WIRE MARKINGS.

NOTICE!
BATTERY CABLES NEED TO ADD MARKINGS
SHOWN IN EXAMPLE BELOW. PRINTED EVERY 120mm.
EXEMPTION:
ALL BLACK WIRES
THIS MARKING IS NOT NEEDED.

MARKING

R2 ISO 6722 100V AWG3 +100 C

CABLE

EXAMPLE: RED 16mm2 WIRE MARKINGS.

MARKING SHOWN ABOVE ONLY TO CABLES LISTED BELOW.

	EQUIVALENCY:		
	mm2		AWG
LOOK FOR EQUIVALENT AWG SIZE FOR mm2	10 mm2	=	AWG8
AND ADD THIS TO CABLE MARKINGS.	16 mm2	=	AWG6
	25 mm2	=	AWG3
FOR EXAMPLE:	35 mm2	=	AWG2
CABLE SIZE IS 25mm2 --> MARKING AWG3.			

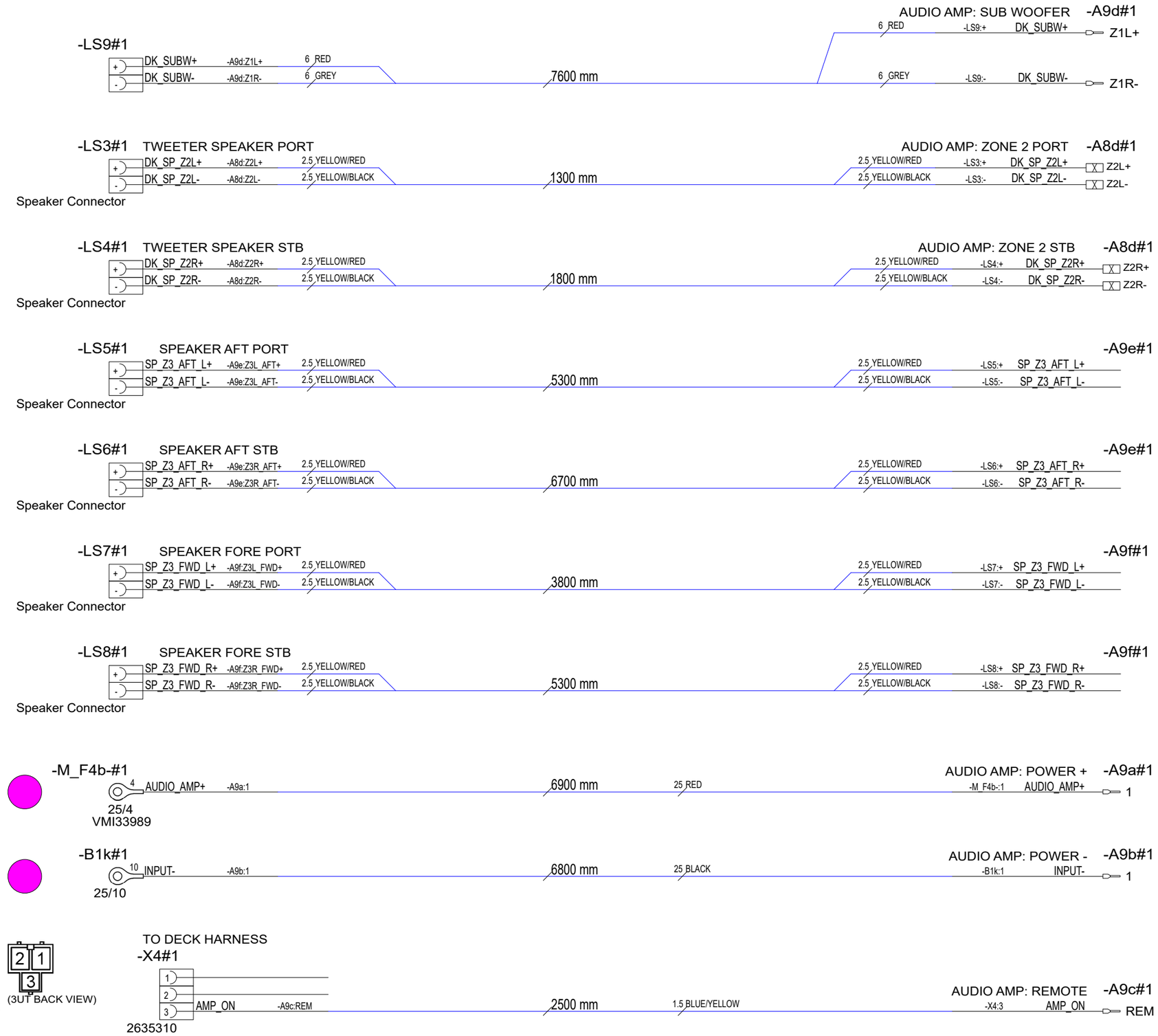

Date of modification	Modified by	Description
3.7.2020	TuM	A1: INTRODUCED DRAWING.
22.12.2020	AR	B2: AFT, FWD AND TWEETER SPEAKERS WIRING ADDED, POWER CABLES CHANGED

Date	2.7.2020
Drawing by	TuM
Sheet rev.	2
Project rev.	B

This document and all the information contained in it is proprietary and confidential information of Axopar Boats Oy. Neither this document nor any of the information contained herein may be reproduced, disclosed to others or used in any purpose other then for the prpose it has been provided without theprior writen permission of Axopar Boats Oy

AXOPAR BRABUS MARINE

Axopar		32631	
Boat	Sub-product code	Product code	Project ID
22	AUDIO PACKAGE HARNESS	HL	44 / 49
Boat model	Title	Loc	Sheet

NOTICE!
BATTERY CABLES NEED TO ADD MARKINGS
SHOWN IN EXAMPLE BELOW.

EXEMPTION:
ALL BLACK WIRES
THIS MARKING IS NOT NEEDED.

MARKING

RK90/115 750Vac/ 1000Vdc AWG0 GR90/115 C

CABLE

EXAMPLE: RED 50mm2 WIRE MARKINGS.

MARKING SHOWN ABOVE ONLY TO CABLES LISTED BELOW.

LOOK FOR EQUIVALENT AWG SIZE FOR mm2
AND ADD THIS TO CABLE MARKINGS.

FOR EXAMPLE:
CABLE SIZE IS 70mm2 --> MARKING AWG2/0.

EQUIVALENCY:

mm2		AWG
50 mm2	=	AWG0
70 mm2	=	AWG2/0
95 mm2	=	AWG3/0
120 mm2	=	250 kcmil

INCLUDED

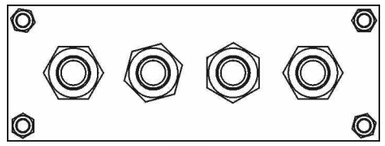

V2501

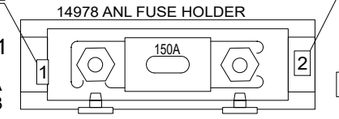

NOTICE! CABLES WITH STICKER

FOR EXAMPLE

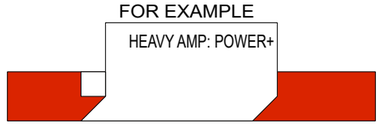

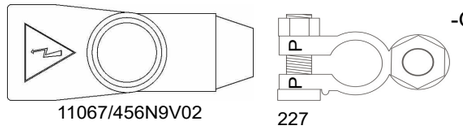

11067/456N9V02 227

INSULATOR FOR BATTERY TERMINAL WITH BOLT RED

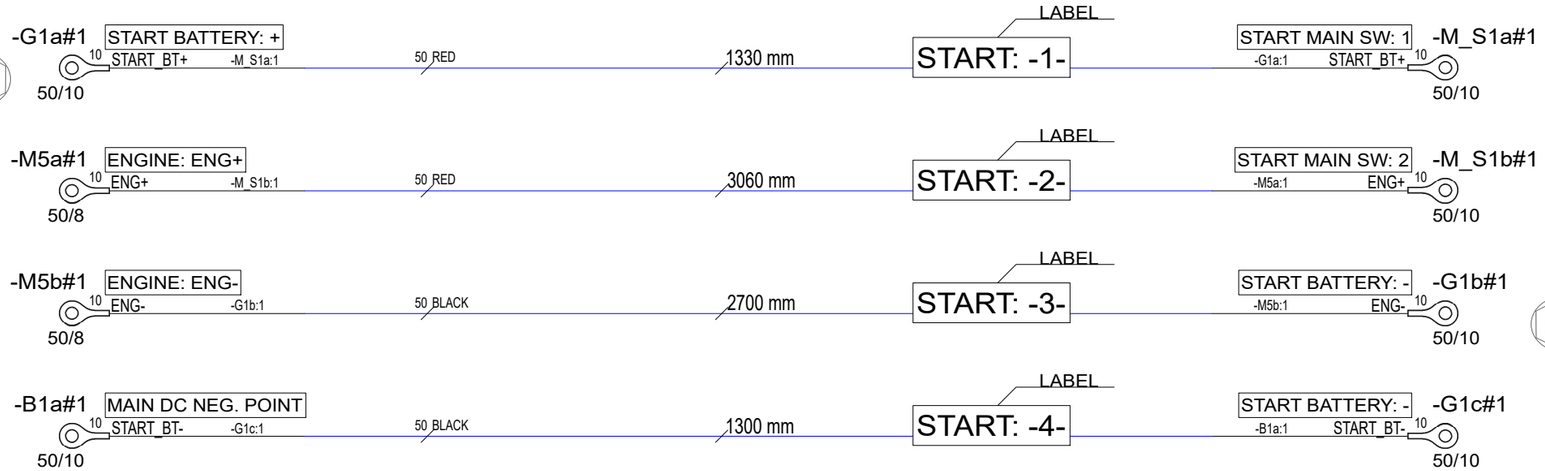

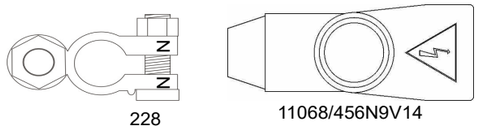

228 11068/456N9V14

INSULATOR FOR BATTERY TERMINAL WITH BOLT BLACK

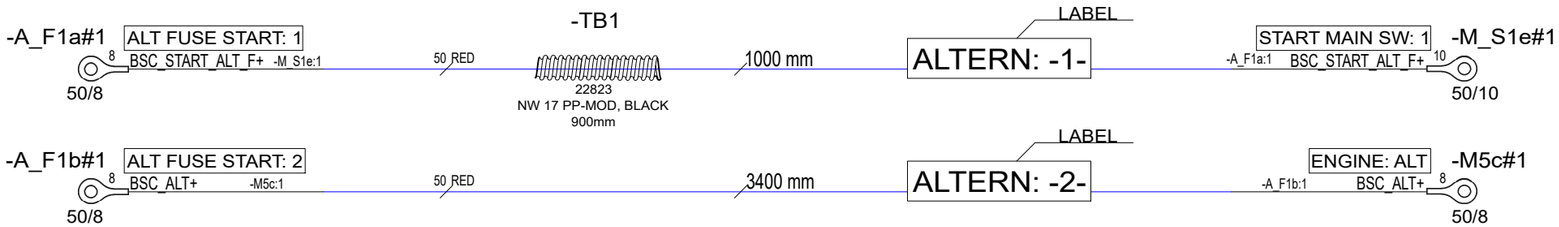

LABEL INSTRUCTIONS

NOTICE! PUT LABELS TO FUSE HOLDER
BASE - NOT TO COVER.

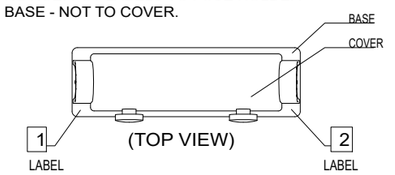

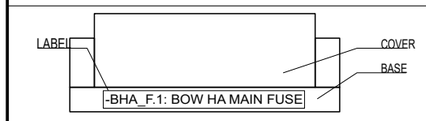

(SIDE VIEW)
(with cover)

Date of modification	Modified by	Description
3.7.2020	TuM	A1: INTRODUCED DRAWING.
22.12.2020	AR	B2: V2501 ADDED, SOME LENGTHS CHANGED, LABELS
26.02.2021	AR	B3: SOME LENGTHS CHANGED

Date	2.7.2020
Drawing by	TuM
Sheet rev.	3
Project rev.	B

This document and all the information contained in it is proprietary and confidential information of Axopar Boats Oy. Neither this document nor any of the information contained herein may be reproduced, disclosed to others or used in any purpose other then for the prpose it has been provided without theprior writen permission of Axopar Boats Oy

AXOPAR BRABUS MARINE

Axopar		32632	
Boat	Sub-product code	Product code	Project ID
22/25	SINGLE BATTERY CABLES BASIC	HL	45 / 49
Boat model	Title	Loc	Sheet

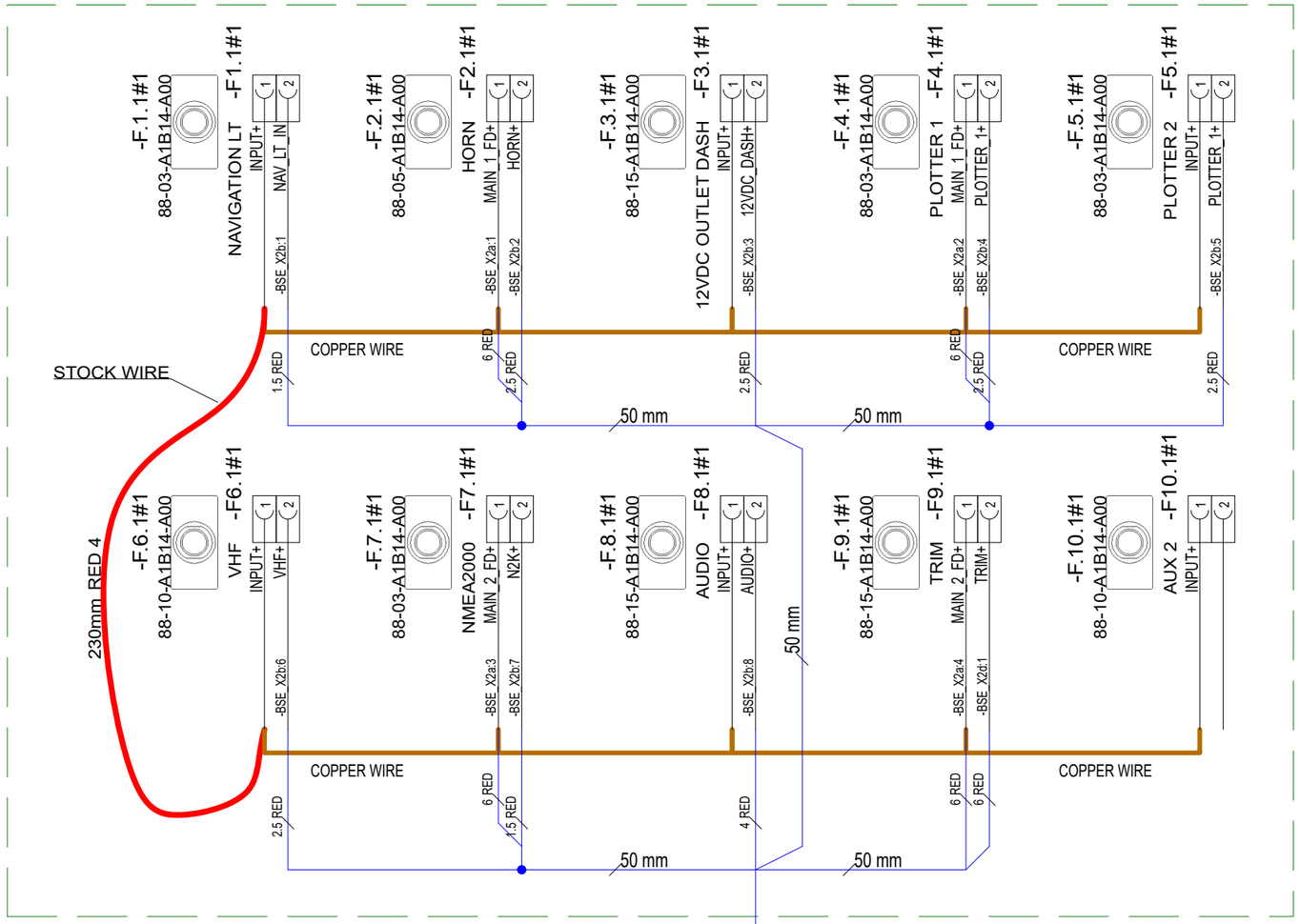

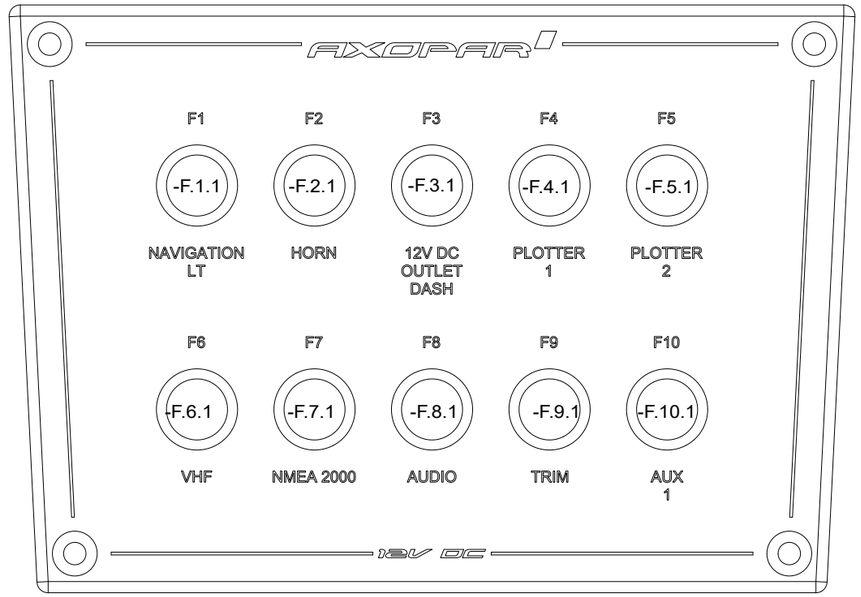

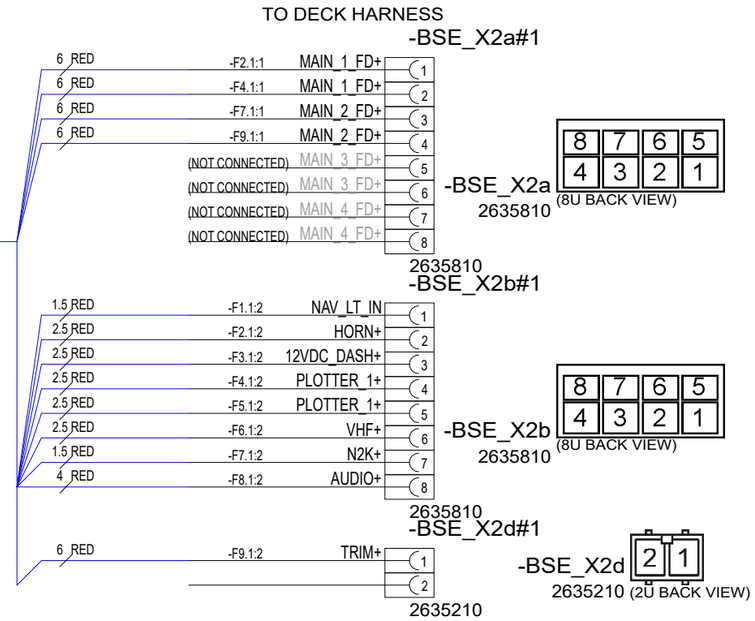

18.05.2021	TT	B1: INTRODUCED DRAWING	Date 18.05.2021	This document and all the information contained in it is proprietary and confidential information of Axopar Boats Oy. Neither this document nor any of the information contained herein may be reproduced, disclosed to others or used in any purpose other then for the prpose it has been provided without theprior writen permission of Axopar Boats Oy	Axopar	35002	34823	
23.8.2021	PN	B2: -F9.1 -> 15A, ADDED -BSE_X2d	Drawing by TT		Boat	Sub-product code	Product code	Project ID
			Sheet rev. 2	AXOPAR / BRABUS MARINE	22	FUSE UNIT BASIC EU	HL	46 / 49
Date of modification	Modified by	Description	Project rev. B		Boat model	Title	Loc	Sheet

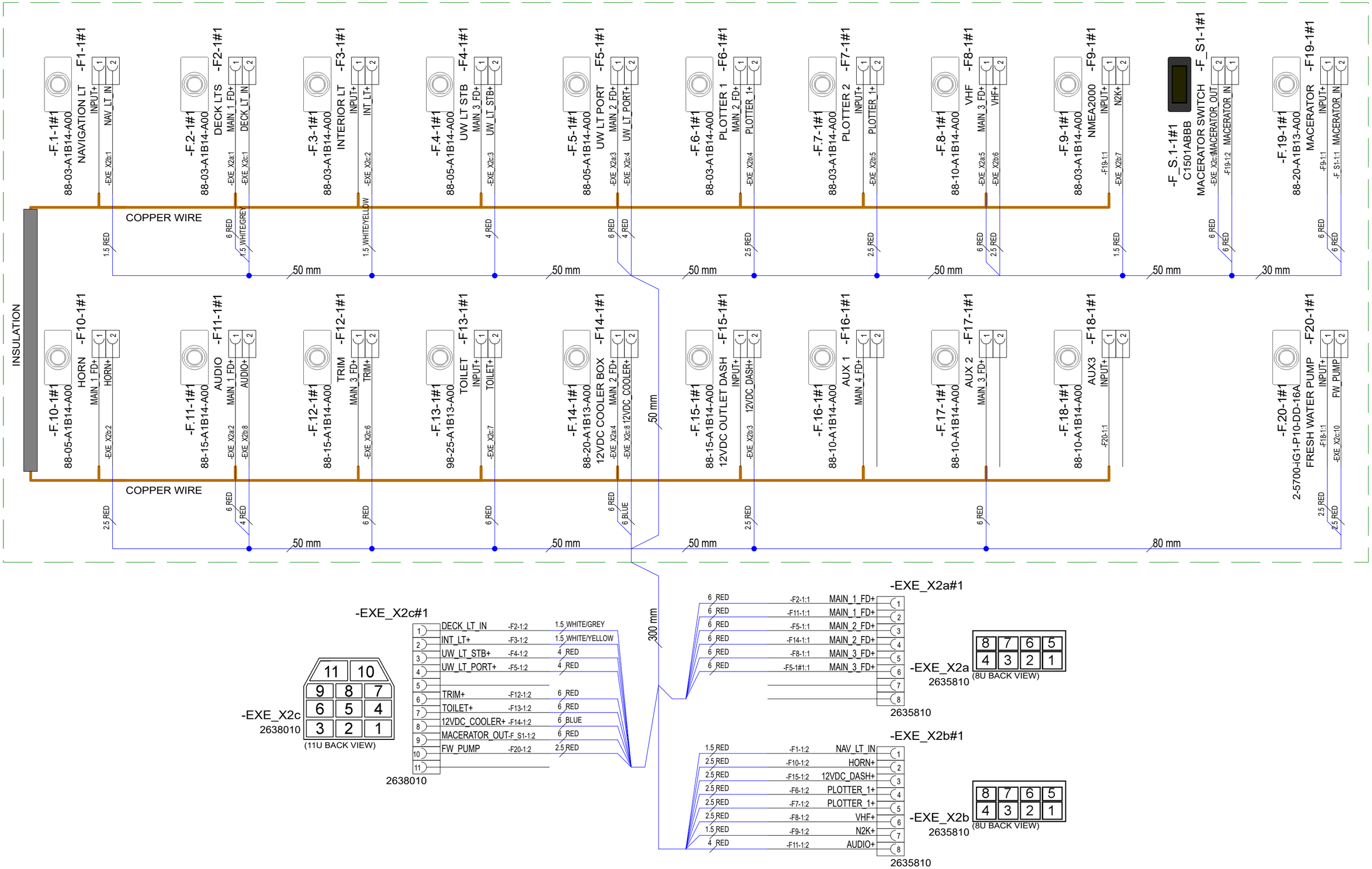

18.05.2021	TT	B1: INTRODUCED DRAWING	Date 18.05.2021	This document and all the information contained in it is proprietary and confidential information of Axopar Boats Oy. Neither this document nor any of the information contained herein may be reproduced, disclosed to others or used in any purpose other then for the prpose it has been provided without theprior writen permission of Axopar Boats Oy	Axopar	35003	34824	
			Drawing by TT		Boat	Sub-product code	Product code	Project ID
			Sheet rev. 1	AXOPAR / BRABUS MARINE	22	FUSE UNIT EXTENDED EU	HL	47 / 49
Date of modification	Modified by	Description	Project rev. B		Boat model	Title	Loc	Sheet

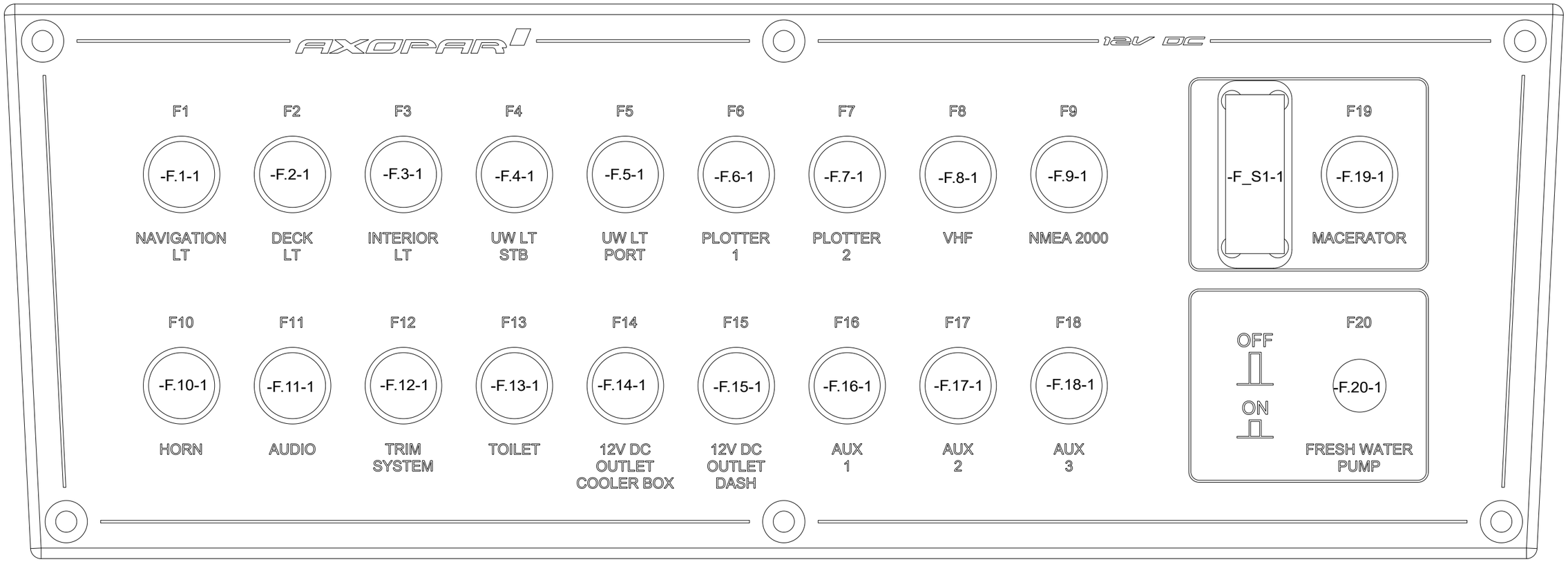

18.05.2021	TT	B1: INTRODUCED DRAWING	Date	18.05.2021	This document and all the information contained in it is proprietary and confidential information of Axopar Boats Oy. Neither this document nor any of the information contained herein may be reproduced, disclosed to others or used in any purpose other then for the prpose it has been provided without theprior writen permission of Axopar Boats Oy	Axopar Boat	35003 Sub-product code	34824 Product code	Project ID
			Drawing by	TT					
			Sheet rev.	1		22 Boat model	FUSE UNIT EXTENDED EU Title	HL Loc	48 / 49 Sheet
Date of modification	Modified by	Description	Project rev.	B					

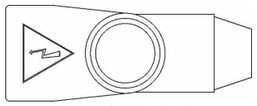

11067/456N9V02

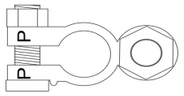

227

INSULATOR FOR BATTERY TERMINAL WITH BOLT RED

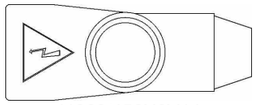

11068/456N9V14

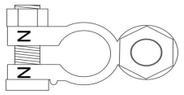

228

INSULATOR FOR BATTERY TERMINAL WITH BOLT BLACK

-G3a#1 AUX BATTERY+ 10 AUX_BT_F+ -M_S3a:1 50/10 — 50 RED — 550 mm — 22823 450 mm NW17 PP-MOD BLACK — LABEL AUX: -1- — AUX MAIN SW. -G3a:1 AUX_BT_F+ 10 -M_S3a#1 50/10

-G3b#1 AUX BATTERY- 10 AUX_BT- -B1e:1 50/10 — 50 BLACK — 6350 mm — LABEL AUX: -2- — MAIN DC NEG. POINT -G3b:1 AUX_BT- 10 -B1e#1 50/10

-M_S3b#1 AUX MAIN SW 10 BOW_THRUSTER+BT_F2a:1 50/10 — 50 RED — 400 mm — LABEL BOW THRUSTER: -1- — BOW THRUSTER FUSE: 1 -M_S3b:BOW_THRUSTER+ 8 -BT_F2a#1 50/8

-BT_F2b#1 BOW THRUSTER FUSE: 2 8 BOW_THRUSTER+M9a:1 50/8 — 50 RED — 600 mm — LABEL BOW THRUSTER: -2- — BOW THRUSTER -BT_F2b:BOW_THRUSTER+ 8 -M9a#1 50/8

-G3c#1 AUX BATTERY: - 10 INPUT- -M9b:1 50/10 — 50 BLACK — 700 mm — LABEL BOW THRUSTER: -3- — BOW THRUSTER -G3c:1 INPUT- 8 -M9b#1 50/8

-M_S3c#1 AUX MAIN SW. 10 AUX_CHR_F+ -C_F3a:1 70/10 — 70 RED — 6950 mm — LABEL ALTERN: -6- — ALT FUSE AUX: 1 -M_S3c:1 AUX_CHR_F+ 8 -C_F3a#1 70/8

-D1d#1 ALT ISOL: OUT 3 6 ALT_AUX_CHR+ -C_F3b:1 70/6 — 70 RED — 500 mm — LABEL ALTERN: -7- — ALT FUSE AUX: 2 -D1d:1 ALT_AUX_CHR+ 8 -C_F3b#1 70/8

NOTICE!
BATTERY CABLES NEED TO ADD MARKINGS
SHOWN IN EXAMPLE BELOW.

EXEMPTION:
ALL BLACK WIRES
THIS MARKING IS NOT NEEDED.

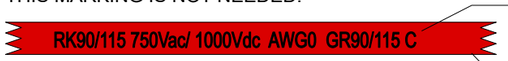

EXAMPLE: RED 50mm2 WIRE MARKINGS.

MARKING SHOWN ABOVE ONLY TO CABLES LISTED BELOW.

LOOK FOR EQUIVALENT AWG SIZE FOR mm2
AND ADD THIS TO CABLE MARKINGS.

FOR EXAMPLE:
CABLE SIZE IS 70mm2 --> MARKING AWG2/0.

EQUIVALENCY:

mm2		AWG
50 mm2	=	AWG0
70 mm2	=	AWG2/0
95 mm2	=	AWG3/0
120 mm2	=	250 kcmil

NOTICE! CABLES WITH STICKER

FOR EXAMPLE

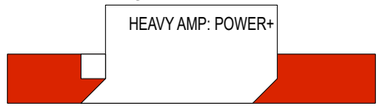

INCLUDED

H. AUX MAIN SW

32643
AXOPAR MS
STICKER

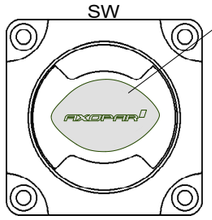

-M_S3#1
4487
AES-1211-28A

-BT_F.2#1
IGN PROT FUSE ANL 225A
36019

14978 ANL FUSE HOLDER

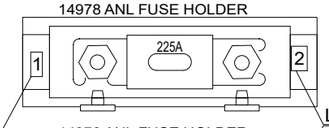

LABEL
-BT_F.2: BOW THRUSTER FUSE

LABEL

LABEL

14978 ANL FUSE HOLDER

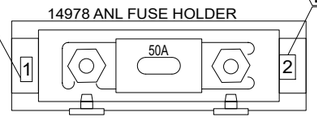

-CH_F.3#1
IGN PROT FUSE ANL 50A
20009

LABEL
-CH_F.3-: ALT. FUSE AUX

LABEL INSTRUCTIONS

NOTICE! PUT LABELS TO FUSE HOLDER
BASE - NOT TO COVER.

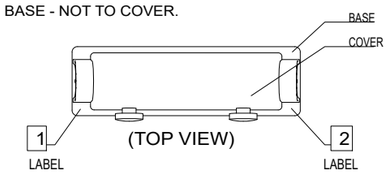

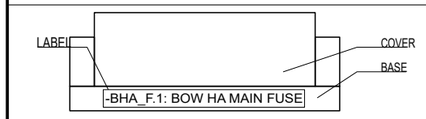

(SIDE VIEW)
(with cover)

Date of modification	Modified by	Description
02.09.2022	TT	B1: INTRODUCED DRAWING

Date	02.09.2022
Drawing by	TT
Sheet rev.	1
Project rev.	B

This document and all the information contained in it is proprietary and confidential information of Axopar Boats Oy. Neither this document nor any of the information contained herein may be reproduced, disclosed to others or used in any purpose other then for the prpose it has been provided without theprior writen permission of Axopar Boats Oy

Axopar		37521	
Boat	Sub-product code	Product code	Project ID
22	BOW TH. CABLES	HL	49 / 49
Boat model	Title	Loc	Sheet

12 Appendix IV: AIS Decontamination – North America

According to

ABYC T-32 Design and Construction in Consideration of Aquatic Invasive Species 7/21

© 2021 American Boat & Yacht Council, Inc

Table of Contents

1 Decontamination criteria based on UMPS III, Table 3 3

2 Example of AIS Owner's Manual Information 4

3 Additional boat-specific recommendations 6

© 2021 Axopar Boats

1 Decontamination criteria based on UMPS III, Table 3

The table is a summary of scientific research indicating the lethal water temperature at point of contact and duration for decontamination. Information is grouped by the location of the boat that is targeted and the life form of Dreissenid mussel targeted (e.g., adult mussel or veliger). Please refer to the *Student Training Curriculum for Watercraft Inspectors and Decontaminators to Prevent and Contain the Spread of Aquatic Invasive Species in the USA* for complete step by step procedures.

	Boat part/ location	**Water temperature**	**Duration[1)] (sec)**	**Type of application**	**Target life stage**
Exterior	Hull	140°F	10	High pressure spray[2)]	Adult
	Trailer	140°F	70	Low pressure spray[3)]	Adult
	PFDs, anchor, paddle	140°F	10	Low pressure spray	Adult or Veliger
Propulsion system	Gimbal	140°F	132	Low pressure spray	Adult
	Engine	140°F[5), 6)]	See note[7)].	Flush[6)]	Veliger
Interior	Ballast tanks	120°F	130	*Low risk* – Flush[4)] *High risk* – Fill and flush	Veliger
	Live well/bait well	120°F	130	Low pressure spray or flush	Veliger
	Bilge	120°F	130	Flush or low pressure spray	Veliger

1) The times listed are the minimum times necessary to achieve mortality.

2) High pressure = 3000 psi.

3) Low pressure = using the pressure from the decontamination unit with no nozzle, not to exceed 60 psi (essentially a garden hose flow).

4) Flush = adding water to a compartment of a boat to treat or force the water out.

5) These temperatures denote the exit temperature (i.e., temperature of water exiting the boat not exiting the wand or flush attachment).

6) When flushing engines with a dedicated connection (not muffs), the pressure should be limited to less than 60 psi to prevent internal engine damage. The maximum input temperature during flushing should not exceed 140°F.

7) *NOTE: Engine flushing relies on the exit temperature as a guideline for decontamination duration.*

© 2021 Axopar Boats

2 Example of AIS Owner's Manual Information

Aquatic invasive species

Aquatic invasive species (AIS) are plants and animals that occur in waters in which they are not native and whose introduction causes or is likely to cause economic or environmental damage or harm to human health. AIS have a negative impact on the waterway, its native species, and recreational and commercial uses of the waterway.

As responsible boaters and citizens, each boat owner should do their part to prevent the spread of these aquatichitchhikers. In many cases, it is also required by law. Check local regulations for any waterway where you will boat.

After each boating trip, follow these three simple steps before you leave the water access to stop the spread of AIS: Clean, Drain, and Dry. This is the boater's way to help protect the environment from the damage that AIS can cause.

Clean

Inspect and remove all aquatic plants, animals, mud, and debris from the boat, engine, trailer, anchor, and any watersports equipment.

- Rinse, scrub or wash, as appropriate, away from storm drains, ditches, or waterways.
- Rinse watercraft, trailer, and equipment with hot water, when possible.
- Flush motor according to owner's manual.

Drain

Completely drain all water from the boat and its compartments, including but not limited to the bilge, wells, lockers, ballast tanks or bags, bait containers, engines, and outdrives.

Dry

Allow the boat to completely dry before visiting any other bodies of water.

© 2021 Axopar Boats

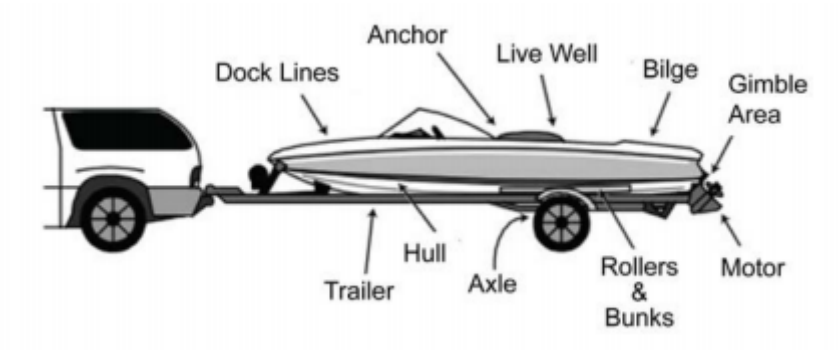

NOTE: Some localities may require inspection or decontamination before and/or after launching. Check state and local laws and regulations for requirements prior to traveling to go boating.

3 Additional boat-specific recommendations

Nonmotorized watercraft

Canoes, rafts, kayaks, rowboats, paddleboats, inflatables, sculls, and other nonmotorized recreational watercraft also require proper treatment.

- **Clean** straps, gear, paddles, floats, ropes, anchors, dip nets, and trailer before leaving the water body.
- **Dry** everything completely between each use and before storing.
- **Wear** quick-dry footwear or bring a second pair of footwear with you when portaging between waterbodies.

Sailboats

- **Clean** centerboard, bilge board, wells, rudderpost, trailer, and other equipment before leaving the water body.
- **Drain** water from boat, motor, bilge, ballast, wells, and portable bait containers before leaving the water body.

Motorized watercraft

- **Inspect** and **clean** motor or engine, including the gimbal area; trailer, including axles, bunkers, and rollers; anchors; dock lines; and equipment before leaving the water body.
- **Drain** live wells, bait containers, ballast and bilge tanks, and engine cooling systems.

Jet boats and personal watercraft (PWCs)

- **Inspect** and **clean** hull, trailer, intake grate, and steering nozzle, etc.
- **Clean** hull, trailer, intake grate, and steering nozzle, etc before leaving the water access.
- **Run** engine 5-10 sec to blow out excess water and vegetation from internal drive before leaving the waterbody.

© 2021 Axopar Boats

13 Appendix V: Transport dimensions

© 2025 Axopar Boats

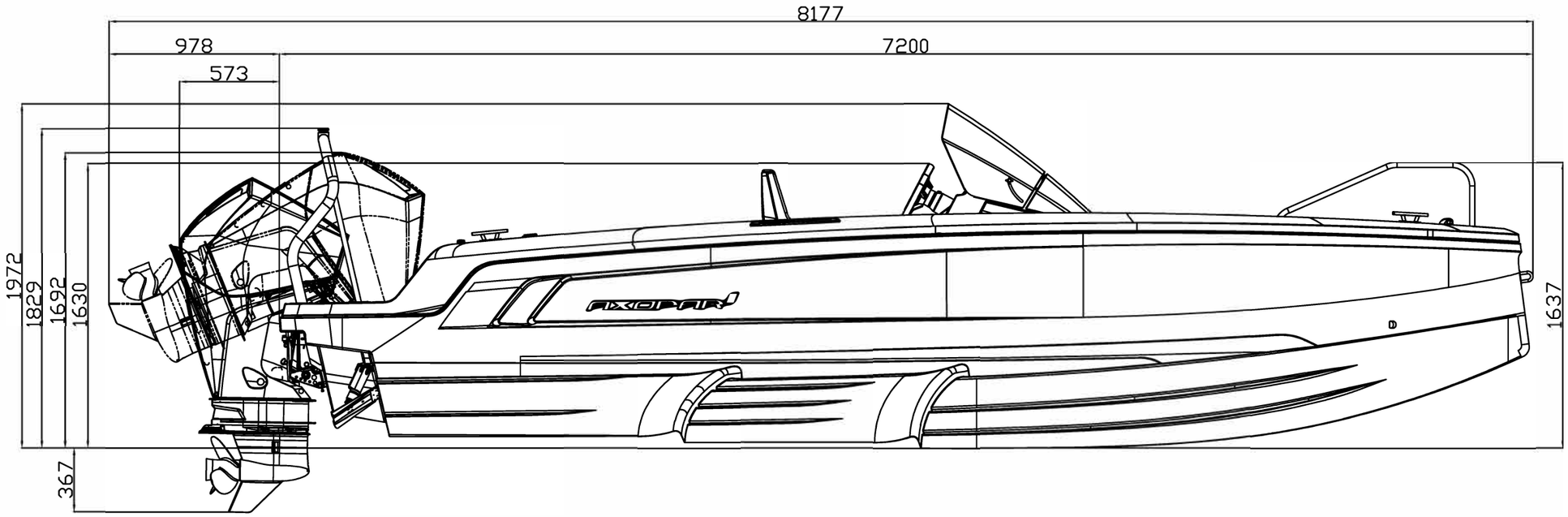

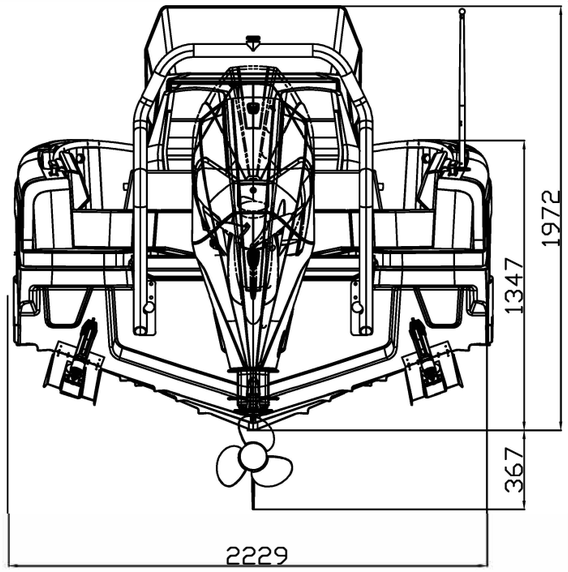

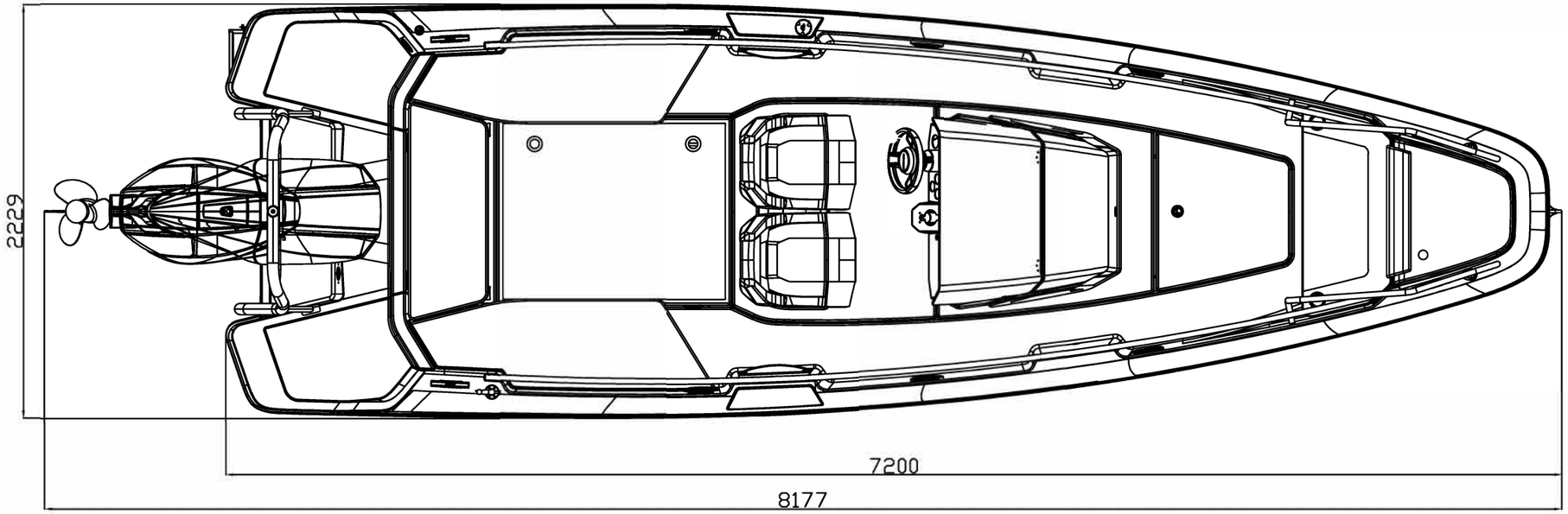

This document and the information contained in it is proprietary and confidential information of Axopar Boats Oy. Neither this document nor any of the information contained herein may be reproduced, disclosed to others, or used for any purpose other than for the purpose it has been provided without the prior written permission of Axopar Boats Oy.

AXOPAR			ITEM		REV
BOAT MODEL AX22			MODEL YEAR 2021	DRAWING	REV
	BY	DATE	DESCRIPTION	SCALE	PAGE
CREATED	L.C.	28.10.2020.	Transport dimensions	1:30	1/1
CHECKED			TECHNICAL DESCRIPTION		
ACCEPTED					